CHAPTER III
MAIN ASSEMBLY

MAIN ASSEMBLY

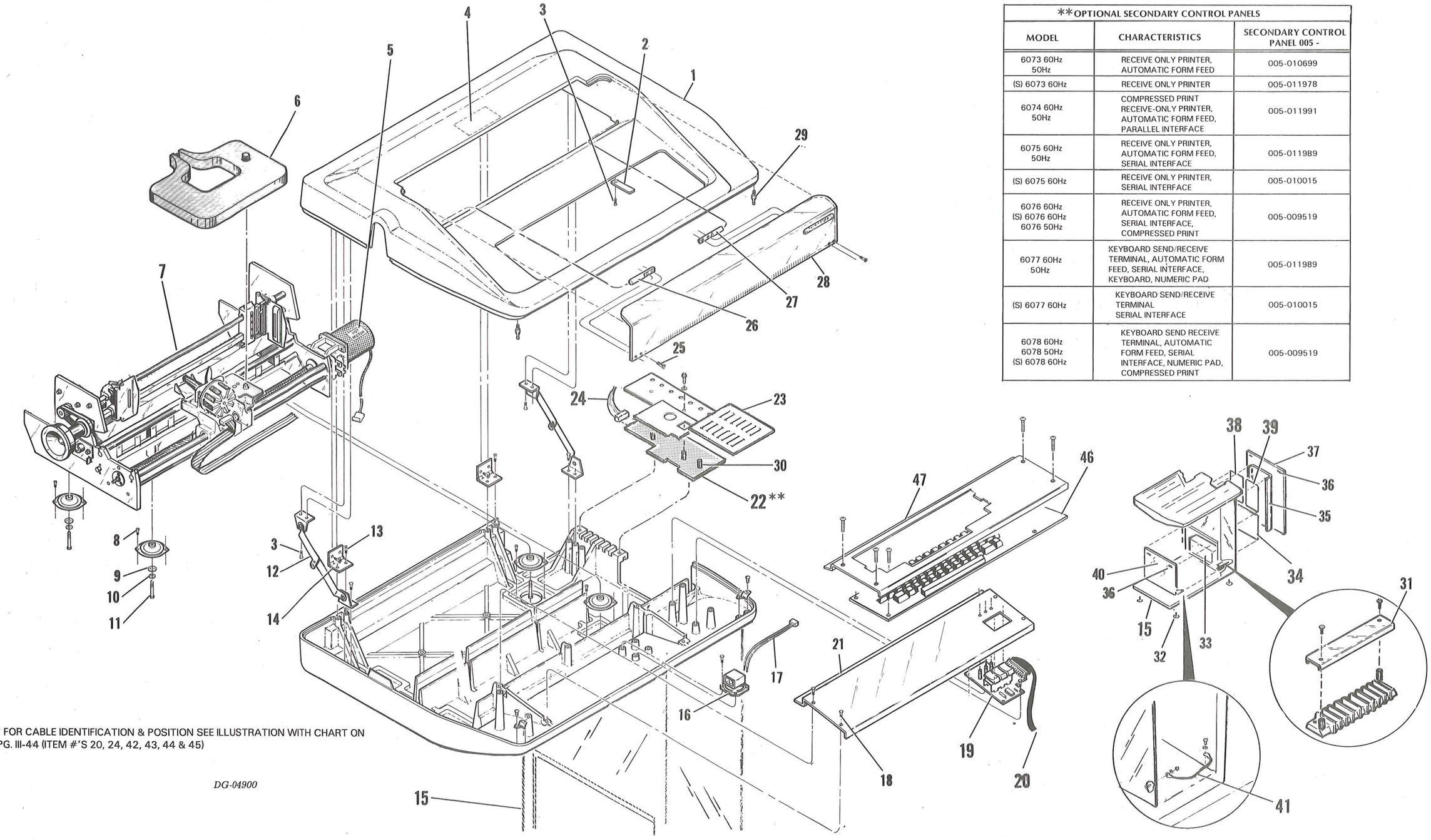

* FOR CABLE IDENTIFICATION & POSITION SEE ILLUSTRATION WITH CHART ON PG. III-44 (ITEM #'S 20, 24, 42, 43, 44 & 45)

**OPTIONAL SECONDARY CONTROL PANELS		
MODEL	CHARACTERISTICS	SECONDARY CONTROL PANEL 005 -
6073 60Hz 50Hz	RECEIVE ONLY PRINTER, AUTOMATIC FORM FEED	005-010699
(S) 6073 60Hz	RECEIVE ONLY PRINTER	005-011978
6074 60Hz 50Hz	COMPRESSED PRINT RECEIVE-ONLY PRINTER, AUTOMATIC FORM FEED, PARALLEL INTERFACE	005-011991
6075 60Hz 50Hz	RECEIVE ONLY PRINTER, AUTOMATIC FORM FEED, SERIAL INTERFACE	005-011989
(S) 6075 60Hz	RECEIVE ONLY PRINTER, SERIAL INTERFACE	005-010015
6076 60Hz (S) 6076 60Hz 6076 50Hz	RECEIVE ONLY PRINTER, AUTOMATIC FORM FEED, SERIAL INTERFACE, COMPRESSED PRINT	005-009519
6077 60Hz 50Hz	KEYBOARD SEND/RECEIVE TERMINAL, AUTOMATIC FORM FEED, SERIAL INTERFACE, KEYBOARD, NUMERIC PAD	005-011989
(S) 6077 60Hz	KEYBOARD SEND/RECEIVE TERMINAL SERIAL INTERFACE	005-010015
6078 60Hz 6078 50Hz (S) 6078 60Hz	KEYBOARD SEND RECEIVE TERMINAL, AUTOMATIC FORM FEED, SERIAL INTERFACE, NUMERIC PAD, COMPRESSED PRINT	005-009519

The drawings and parts lists contained herein are the property of DGC and shall neither be reproduced in whole or in part without DGC prior written approval nor be implied to grant any license to make, use, or sell equipment manufactured in accordance herewith.

PAGE & ITEM NO.	DESCRIPTION	QTY	DGC PART NO.	REF PAGE NO.
III-2				
	MAIN 180 CPS R/O P/I	**1**	**005009583**	**III-2**
1	TOP COVER SERIAL PRINTER	1	002004151	
2	SPRING, CLIP, WINDOW 30CPSKSR	2	002005530	
3	HEX WSHR HD PLASTITE SCDP 4-20X3/8	14	106000842	
4	LBL RIBBON CORRECT CTG	1	002007938	
5	LBL HOT MOTOR	1	002008174	
6	**RIBBON CARTRIDGE**	**1**	**005009507**	**III-30**
7	**MECHANISM**	**1**	**005009501**	**III-18**
8	SCR PHH PNH SCDP SEMS 6-32X5/16	8	106000480	
9	WSHR FLAT 1/4°.281X.625X.065SCDP	4	106000445	
10	WSHR INTL TOOTH SCDP 1/4	4	106000441	
11	SCR LSTD PNH SCDP 1/4-20X1	4	106000864	
12	STAY ASSY 30 CPS PTR	2	002005617	
13	SLTD FLH PLASTITE BLK OXD 4-20X3/8	8	106000841	
14	HINGE, CVR, MOD 30CPS KSR	2	002005526	
15	**PEDESTAL**	**1**	**005009502**	**III-12**
16	MIN PM SPEAKER11/2° .05W#99-6035	1	123000427	
17	**CONTROL LOGIC TO BELL CABLE**	**1**	**005009576**	**III-4 III-42**
18	SCR SLTD PNH NYL WHT 6-32X1/4	4	106000212	
19	**CONTROL PANEL PCB TESTED SER PTR**	**1**	**005006407**	
	I.P.L. CONT. PNL. P.C.B.	REF	016000339	
	SCHEMATIC	REF	001001007	
	ARTWORK	REF	107000636	
*** 20**	**CONTROL LOGIC TO CONTROL PNL CBL**	**1**	**005009582**	**III-10 III-42**
21	PNL, FLR 30CPS PTR	1	002008342	
****22**	**SECONDARY CONTROL PCB**	**1**	**005009519**	
	I.P.L. SEC. CONT. P.C.B.	REF	016000543	
	SCHEMATIC	REF	001001224	
	ARTWORK	REF	107000922	
23	CVR SEC CONTROL PNL	1	002007435	
*** 24**	**CONTROL LOGIC TO SEC CONTROL CBL**	**1**	**005009581**	**III-8 III-42**
25	SCR PHH FLH SCDP 4-40X5/16	4	106000129	
26	PIVOT PIN, LH, WINDOW 30CPS	1	002005528	
27	PIVOT PIN, RH, WINDOW 30CPS	1	002005529	
28	WINDOW, P2	1	002008173	
29	BALL STUD PI 16-525-6	2	123001005	
30	HEX SPACER, .50 LONG	3	123001182	
31	CVR TERM BLOCK	1	002007440	
32	LEG LEVELER, ADJUSTABLE FA2720	4	123000970	
33	SHIELD HIGH VOLTAGE	1	002007436	
34	**CONTROL LOGIC PCB LP-2**	**1**	**005009503**	**III-43**
	I.P.L. CONT. LOGIC P.C.B.	REF	016000541	
	SCHEMATIC	REF	001001220	
	ARTWORK	REF	107000897	
35	CVR HIGH VOLTAGE	1	002007352	
36	NYLATCH 1/4T .057 PNL HRN6-2-2	4	123001018	
37	PNL, MAIN 30CPS PTR	1	002004181	
38	**DRIVER PCB**	**1**	**005009505**	**III-43**
	I.P.L. DRIVER P.C.B.	REF	016000540	
	SCHEMATIC	REF	001001226	
	ARTWORK	REF	107000832	
39	**P/S PCB LP-2**	**1**	**005009514**	**III-43**
	I.P.L. P/S P.C.B.	REF	016000542	
	SCHEMATIC	REF	001001223	
	ARTWORK	REF	107000886	

The drawings and parts lists contained herein are the property of DGC and shall neither be reproduced in whole or in part without DGC prior written approval nor be implied to grant any license to make, use, or sell equipment manufactured in accordance herewith.

PAGE & ITEM NO.	DESCRIPTION	QTY	DGC PART NO.	REF PAGE NO.
40	PNL, P/S 300P5 PTR	1	002004182	
41	**GND WIRE KIT 30CPS SER PTR**	**1**	**005007869**	**III-4**
***42**	**DRIVER TO CONTROL LOGIC CBL**	**1**	**005009580**	**II-8 III-42**
***43**	**P/S TO CONTROL LOGIC CABLE**	**1**	**005009578**	**III-6 III-42**
***44**	**P/S TO DRIVER CABLE**	**1**	**005009579**	**III-6 III-42**
***45**	**CONTROL TO PAR I/O CABLE**	**1**	**005009596**	**III-10 III-42**
	OPTIONAL ITEMS (TP-2)			
46	STANDARD KEYBOARD	1	118000677	I-2
47	COVER PANEL STANDARD	1	002006170	
	NUMERIC KEYBOARD (NOT SHOWN)	1	118000676	
	COVER PANEL NUMERIC (NOT SHOWN)	1	002006171	
	LABEL DASHER P/2 } Information Not Available	1	002008222	
	LABEL MODEL S/N	1	002008223	
	TERM BUSHING	1	111000753	
	KED NUT #8-32	1	106000255	
	WASHER FLAT #8	1	106000264	
	PANEL FILLER	1	002008342	

* SEE ILLUSTRATION PAGE III-2

** FOR ADDITIONAL SECONDARY CONTROL P.C.B OPTIONS SEE TABLE III-2

The drawings and parts lists contained herein are the property of DGC and shall neither be reproduced in whole or in part without DGC prior written approval nor be implied to grant any license to make, use, or sell equipment manufactured in accordance herewith.

GROUND WIRE KIT
& CONTROL LOGIC TO BELL CABLE

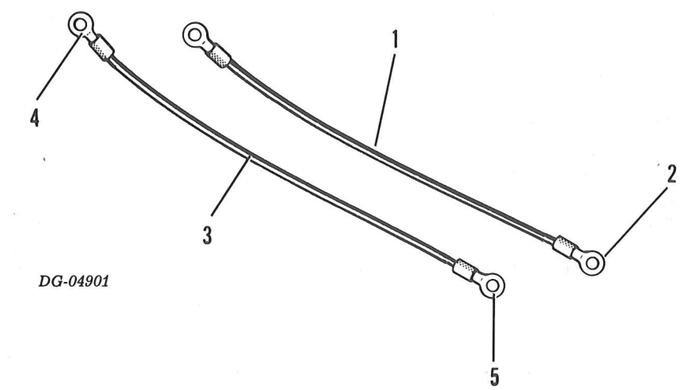

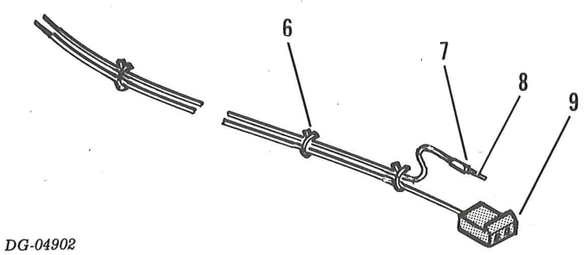

The drawings and parts lists contained herein are the property of DGC and shall neither be reproduced in whole or in part without DGC prior written approval nor be implied to grant any license to make, use, or sell equipment manufactured in accordance herewith.

PAGE & ITEM NO.	DESCRIPTION	QTY	DGC PART NO.	REF PAGE NO.
III-4				
	GROUND WIRE KIT	1	005007869	III-2
1	WIRE TERMINATION	1	029000353	
	WIRE #14 AWG GRN	1	109000031	
2	TERM RING #10 STUD	2	111000035	
3	WIRE TERMINATION	1	029002213	
	WIRE #14AWG GRN	1	109000031	
4	TERM RING #10 STUD	1	111000035	
5	TERM RING #6 STUD	1	111000140	
III-4				
	CONTROL LOGIC TO BELL CABLE	1	005009576	III-2 III-42
6	SSTIM 3/4	13	123000025	
7	SLEEVING 3/32 HEAT SHRINK	1	109000098	
8	TERM 18-24 AWG	2	111000578	
9	CONN. P.C.B.	1	111000562	

The drawings and parts lists contained herein are the property of DGC and shall neither be reproduced in whole or in part without DGC prior written approval nor be implied to grant any license to make, use, or sell equipment manufactured in accordance herewith.

POWER SUPPLY TO CONTROL LOGIC CABLE & POWER SUPPLY TO DRIVER CABLE

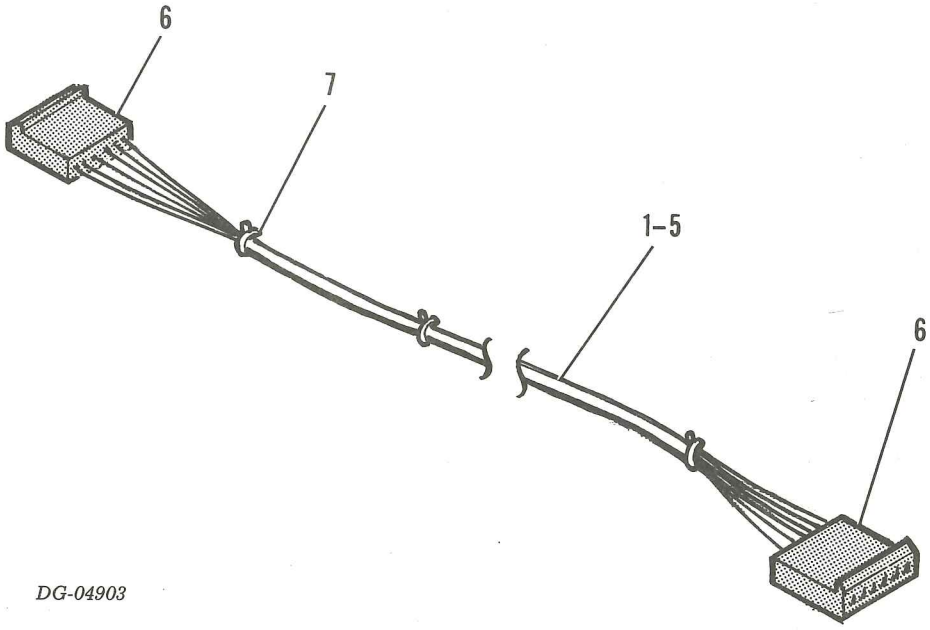

DG-04903

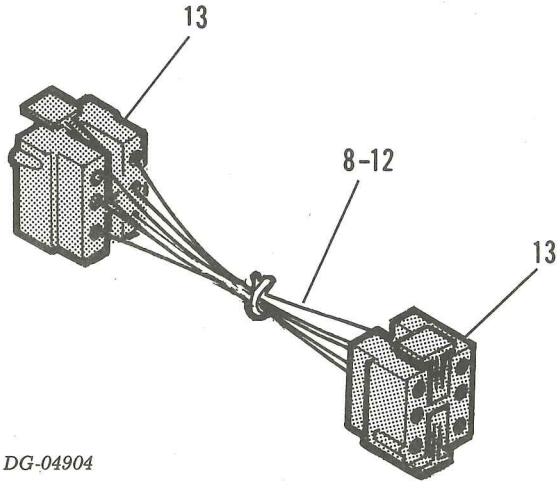

DG-04904

The drawings and parts lists contained herein are the property of DGC and shall neither be reproduced in whole or in part without DGC prior written approval nor be implied to grant any license to make, use, or sell equipment manufactured in accordance herewith.

PAGE & ITEM NO.	DESCRIPTION	QTY	DGC PART NO.	REF PAGE NO.
III-6				
	P/S TO CONTROL LOGIC CABLE	1	005009578	III-2 III-42
1	WIRE TERMINATION	1	029002986	
	WIRE 22AWG 19X34	1	109000035	
	TERM 18X24AWG	2	111000578	
2	WIRE TERMINATION	1	029002987	
	WIRE 22AWG 19X34 BLU	1	109000012	
	TERM 18X24 AWG	2	111000578	
3	WIRE TERMINATION	1	029002988	
	WIRE 22AWG 19X34 WHT	1	109000015	
	TERM 18X24 AWG	2	111000578	
4	WIRE TERMINATION	1	029002989	
	WIRE 22AWG 19X34 BLK	1	109000016	
	TERM 18X24 AWG	1	111000578	
5	WIRE TERMINATION	1	029002990	
	WIRE 22AWG 19X34 ORN	1	109000013	
	TERM 18X24 AWG	2	111000578	
6	CONNECTOR P.C.B.	2	111000565	
7	SSTIM 3/4	3	123000025	
	WIRE TERMINATION	1	029002985	
III-6				
	P/S TO DRIVER CABLE	1	005009579	III-2 III-42
8	WIRE TERMINATION	1	029002979	
	WIRE #14AWG WHT	1	109000029	
	CONN 20-14 TIN PIN	2	111000285	
9	WIRE TERMINATION	1	029002980	
	WIRE #14AWG BLUE	1	109000032	
	CONN 20-14 TIN PIN	2	111000285	
10	WIRE TERMINATION	1	029002981	
	WIRE #14AWG ORN	1	109000033	
	CONN 20-14 TIN PIN	2	111000285	
11	WIRE TERMINATION	1	029002982	
	WIRE #14AWG YEL	1	109000034	
	CONN 20-14 TIN PIN	2	111000285	
12	WIRE TERMINATION	1	029002983	
	WIRE #18AWG WHT	2	109000015	
	CONN 20-14 TIN PIN	2	111000285	
13	CONN SKT HSG 6 PIN	2	111000518	

The drawings and parts lists contained herein are the property of DGC and shall neither be reproduced in whole or in part without DGC prior written approval nor be implied to grant any license to make, use, or sell equipment manufactured in accordance herewith.

DRIVER TO CONTROL LOGIC CABLE
CONTROL LOGIC TO SECONDARY CONTROL CABLE

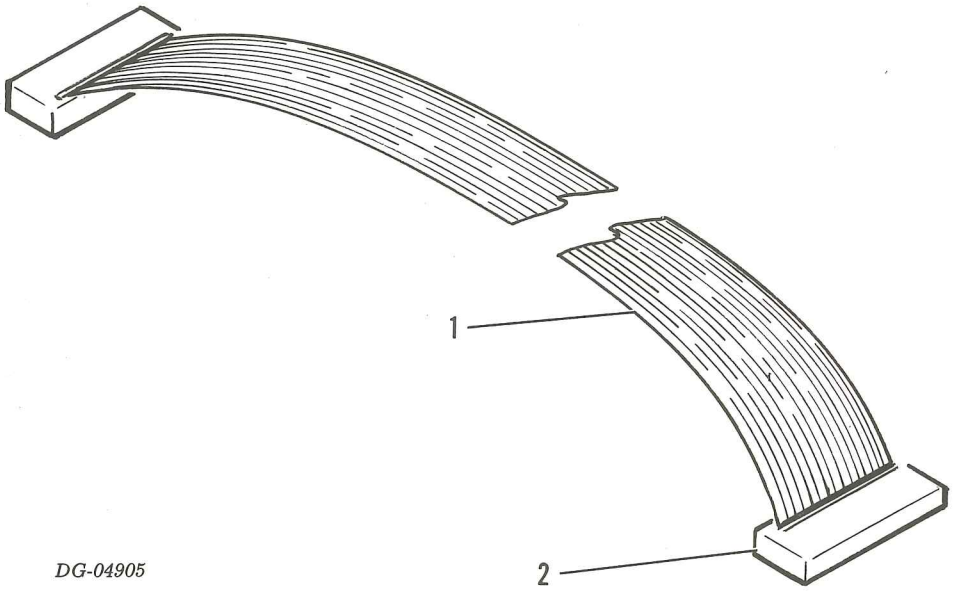

DG-04905

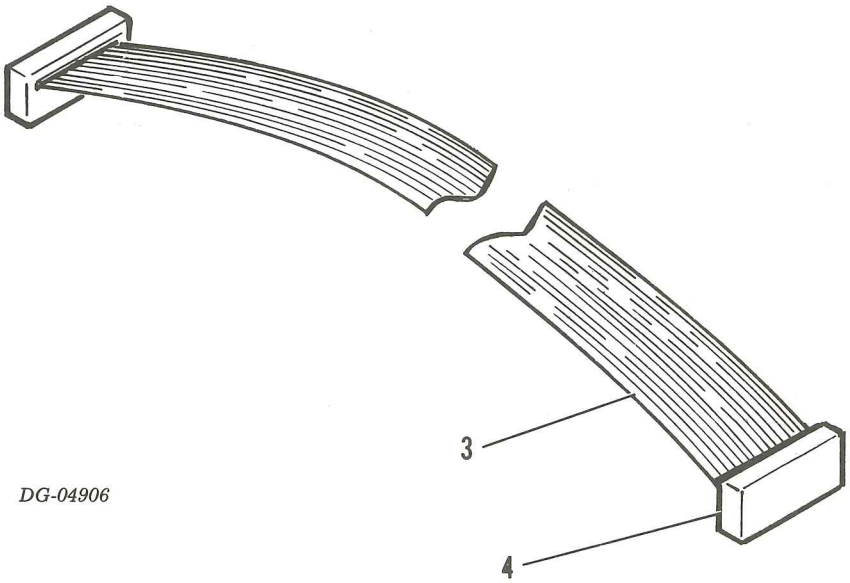

DG-04906

The drawings and parts lists contained herein are the property of DGC and shall neither be reproduced in whole or in part without DGC prior written approval nor be implied to grant any license to make, use, or sell equipment manufactured in accordance herewith.

PAGE & ITEM NO.	DESCRIPTION	QTY	DGC PART NO.	REF PAGE NO.
III-8				
	DRIVER TO CONTROL LOGIC CABLE	**1**	**005009580**	**III-2 III-42**
1	CABLE RIBBON 34 COND.	1	109000173	
2	CONN 34 PIN	2	111000883	
	CONTROL LOGIC TO SEC CONTROL CABLE	**1**	**005009581**	**III-2 III-42**
3	WIRE 20 COND 28AWG STRAND	1	109000208	
4	CONN 20 PIN	2	111000884	

The drawings and parts lists contained herein are the property of DGC and shall neither be reproduced in whole or in part without DGC prior written approval nor be implied to grant any license to make, use, or sell equipment manufactured in accordance herewith.

CONTROL LOGIC TO CONTROL PANEL CABLE & CONTROL TO PAR I/O CABLE

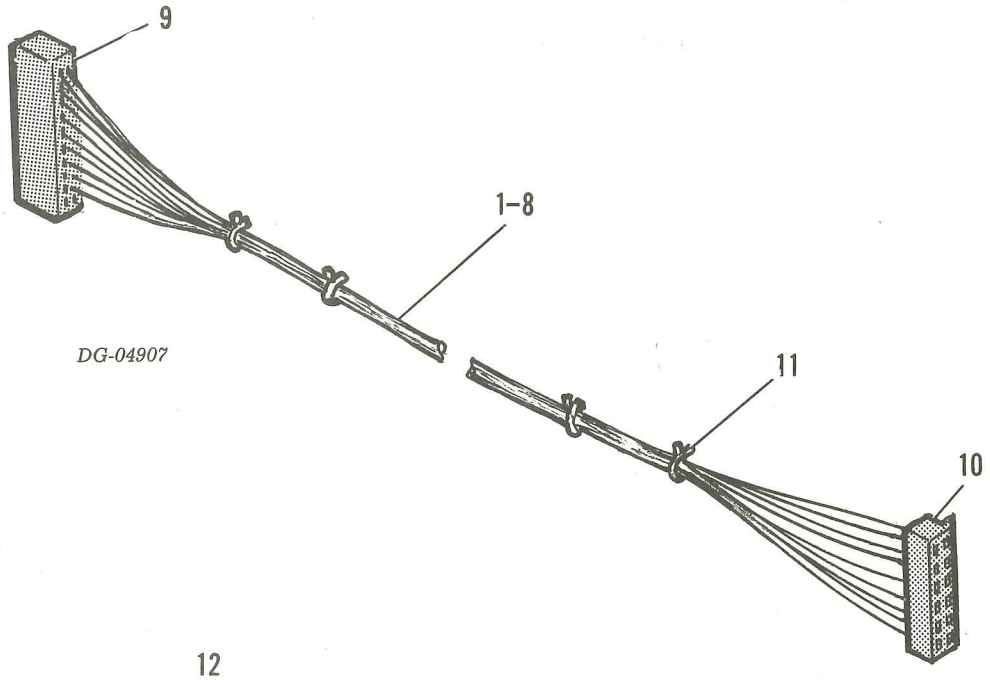

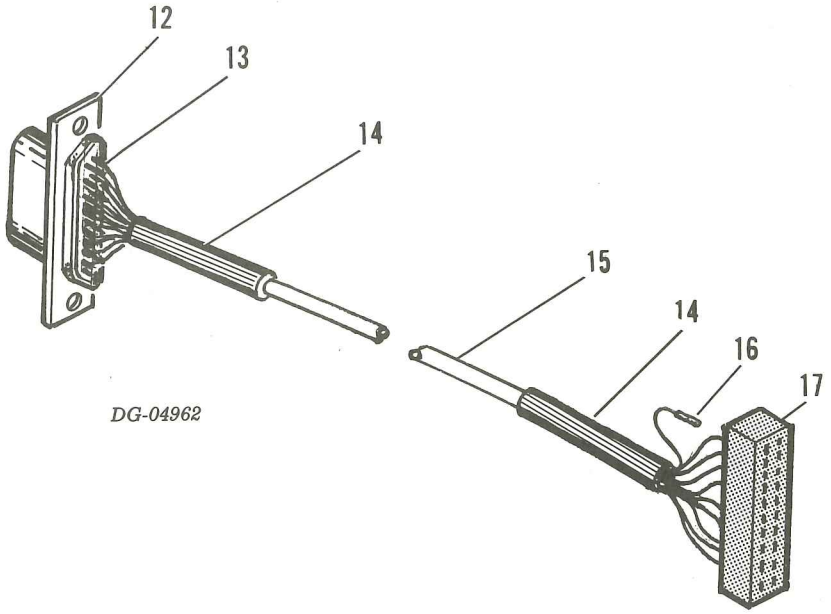

The drawings and parts lists contained herein are the property of DGC and shall neither be reproduced in whole or in part without DGC prior written approval nor be implied to grant any license to make, use, or sell equipment manufactured in accordance herewith.

PAGE & ITEM NO.	DESCRIPTION	QTY	DGC PART NO.	REF PAGE NO.
III-10				
	CONTROL LOGIC TO CONTROL PNL CABLE	**1**	**005009582**	**III-2 III-42**
1	WIRE TERMINATION	1	029002999	
	WIRE #22 AWG 19X34 RED	1	109000008	
	CONN. 24-20 AWG	1	111000058	
	TERM 18X24 AWG	1	111000578	
2	WIRE TERMINATION	1	029003001	
	WIRE 22 AWG 19X34 VIO.	1	109000066	
	CONN 24-20 AWG	1	111000058	
	TERM 18X24 AWG	1	111000578	
3	WIRE TERMINATION	1	029003002	
	WIRE #22 AWG 19X34 GRN	1	109000011	
	CONN 24-20 AWG	1	111000058	
	TERM 18-24 AWG	1	111000578	
4	WIRE TERMINATION	1	029003003	
	WIRE 22 AWG 19X34 BLUE	1	109000012	
	CONN 20-24 AWG	1	111000058	
	TERM 18-24 AWG	1	111000578	
5	WIRE TERMINATION	1	029003004	
	WIRE 22 AWG 19X34 ORN	1	109000013	
	CONN 20-24 AWG	1	111000058	
	TERM 18-24 AWG	1	111000578	
6	WIRE TERMINATION	1	029003005	
	WIRE 22 AWG 19X34 YEL.	1	109000035	
	CONN 20-24 AWG	1	111000058	
	TERM 18-24 AWG	1	111000578	
7	WIRE TERMINATION	1	029003006	
	WIRE 22AWG 19X34 GRY	1	109000063	
	CONN 20-24 AWG	1	111000058	
	TERM 18-24 AWG	1	111000578	
8	WIRE TERMINATION	1	029003007	
	WIRE 22 AWG 19X34 BRN	1	109000064	
	CONN 24-20 AWG	1	111000058	
	TERM 18-24 AWG	1	111000578	
9	CONN CABLE 20 DUAL POSITION	1	111000027	
10	CONN 12 PIN CRIMP TYPE	1	111000564	
11	SSTIM 3/4	9	123000025	
III-10	**CONTROL TO PAR I/O CABLE**	**1**	**005009596**	**III-2 III-42**
12	CONN 36 PIN	1	111000886	
13	SLEEVING 3/32" HEAT SHRINK	1	109000098	
14	TUBING 1/2 DIA HEAT SHRINK BLK	1	109000061	
15	CABLE 24AWG 19-COND 7X32	1	109000045	
16	CONN AMP 85969-2 CRP 24-20 AWG	19	111000058	
17	CONN CABLE 20 DUAL POS AMP 86148-1	1	111000027	

The drawings and parts lists contained herein are the property of DGC and shall neither be reproduced in whole or in part without DGC prior written approval nor be implied to grant any license to make, use, or sell equipment manufactured in accordance herewith.

PEDESTAL

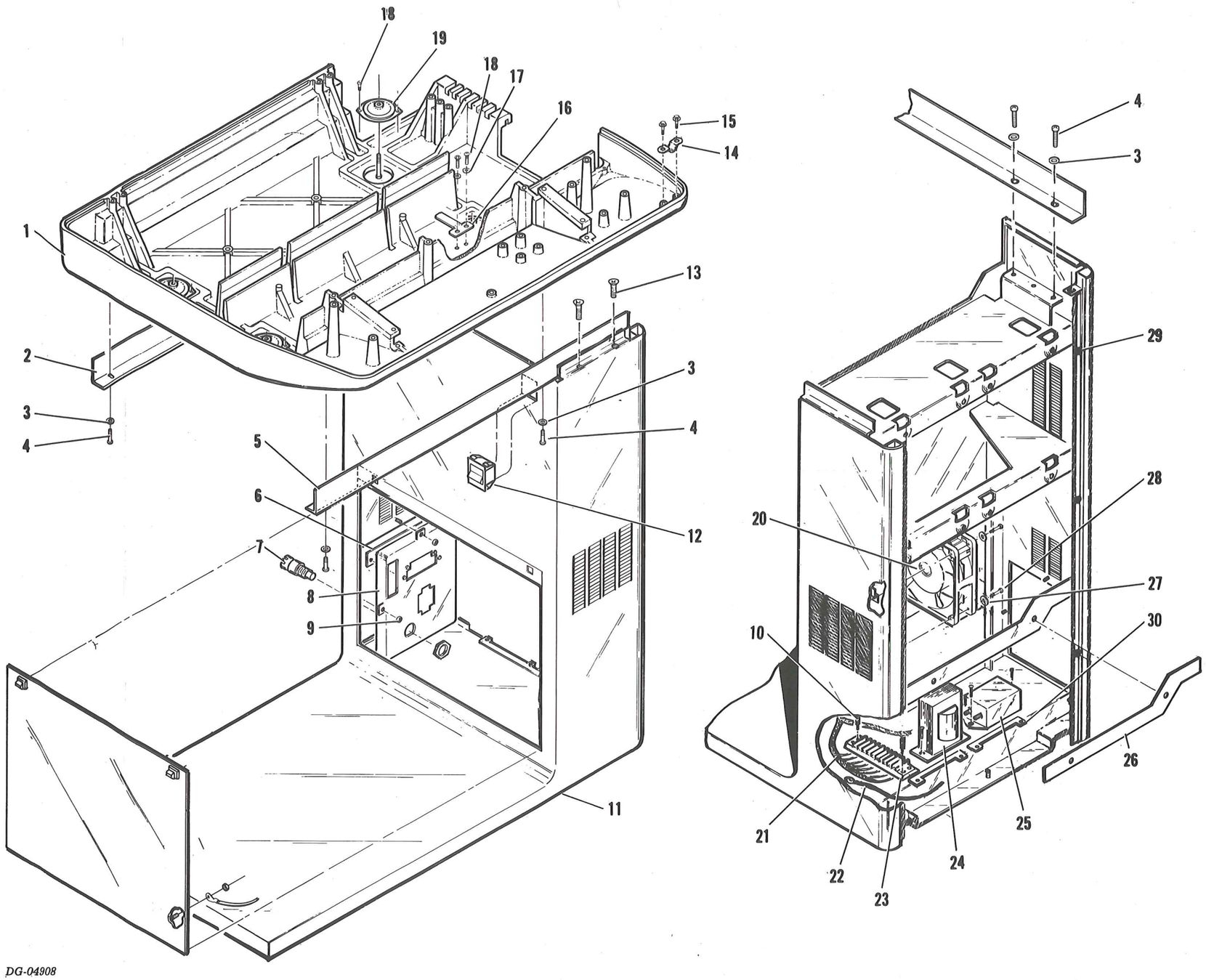

The drawings and parts lists contained herein are the property of DGC and shall neither be reproduced in whole or in part without DGC prior written approval nor be implied to grant any license to make, use, or sell equipment manufactured in accordance herewith.

PAGE & ITEM NO.	DESCRIPTION	QTY	DGC PART NO.	REF PAGE NO.
III-12				
	PEDESTAL	**1**	**005009502**	**III-2**
1	BASE COVER SERIAL PRINTER	1	002004150	
2	ANGLE, REAR 30CPS PTR	1	002004166	
3	WSHR FLAT #10 .219X.500X.049 SCDP	6	106000263	
4	SCR PHH PNH SCDP SEM 10-32X1/2	6	106000108	
5	ANGLE FRONT	1	002007407	
6	COVER PLATE	1	002007420	
7	CIRCUIT BREAKER 5 A.	1	113000168	
8	PNL, INLET	1	002007405	
9	NUT HEX KEP SCDP 4-40	3	106000257	
10	THREADED SPACER	2	002007449	
11	PEDESTAL WELDMENT	1	002007418	
12	SWITCH DPOT 15/125 10/250 TGD0511-T88	1	110000226	
13	SCR PHH FLH SCDP 10-32X3/8	2	106000174	
14	STUD REC #C1663-012-27	2	123000132	
15	HEX WSHR HD PLASTITE SCDP 4-20X3/8	4	106000842	
16	CLIP CABLE	1	002006131	
17	WSHR FLAT #6 .156X.375X.049 SCDP	2	106000461	
18	SCR PHH PNH SCDP SEMS 6-32X5/16	8	106000480	
19	SHOCK MOUNT 150-PD-10	4	123000972	
20	FAN	1	115000151	
21	**P/S HARNESS**	**1**	**005009516**	**III-14**
22	GND WIRE	1	029002926	
23	TERM BLOCK 10POS KULKA #600-10-UH	1	111000754	
24	**XFMR**	**1**	**005009523**	**III-16**
25	CAP LINE FILTER EMI PWR 10R6 10A	1	103000288	
26	INSULATOR PCB	1	002007442	
27	WSHR INTL TOOTH SCDP #6	3	106000455	
28	SCR SLTD BDGH SCDP 6-32X1 1/2	3	106000305	
29	BUTTON BUMPER 3265	6	123000971	
30	CARD GUIDE	2	123001274	
	TERM R TNG #10STUD 16-14 AMP 2-31903-2	2	111000035	
	TERM R TNG #8STUD 22-16 AMP 2-31886-2	8	111000141	
	TERM RCPT 110 22-18AWG AMP 61048-2	2	111000206	
	TERM RCPT 187 22-18AWG 509774-T1	4	111000586	
	TERM RCPT 250 22-18AWG 509778 — INFORMATION NOT AVAILABLE	2	111000588	
	TERM RCPT 110SER 22-18AWG 509770-T1	2	111000589	
	TERM INSUL SPRING SPADE #18-22AWG	9	111000680	
	CONN JUMPER 2 POS 422-13-11-026	2	111000697	

The drawings and parts lists contained herein are the property of DGC and shall neither be reproduced in whole or in part without DGC prior written approval nor be implied to grant any license to make, use, or sell equipment manufactured in accordance herewith.

POWER SUPPLY HARNESS

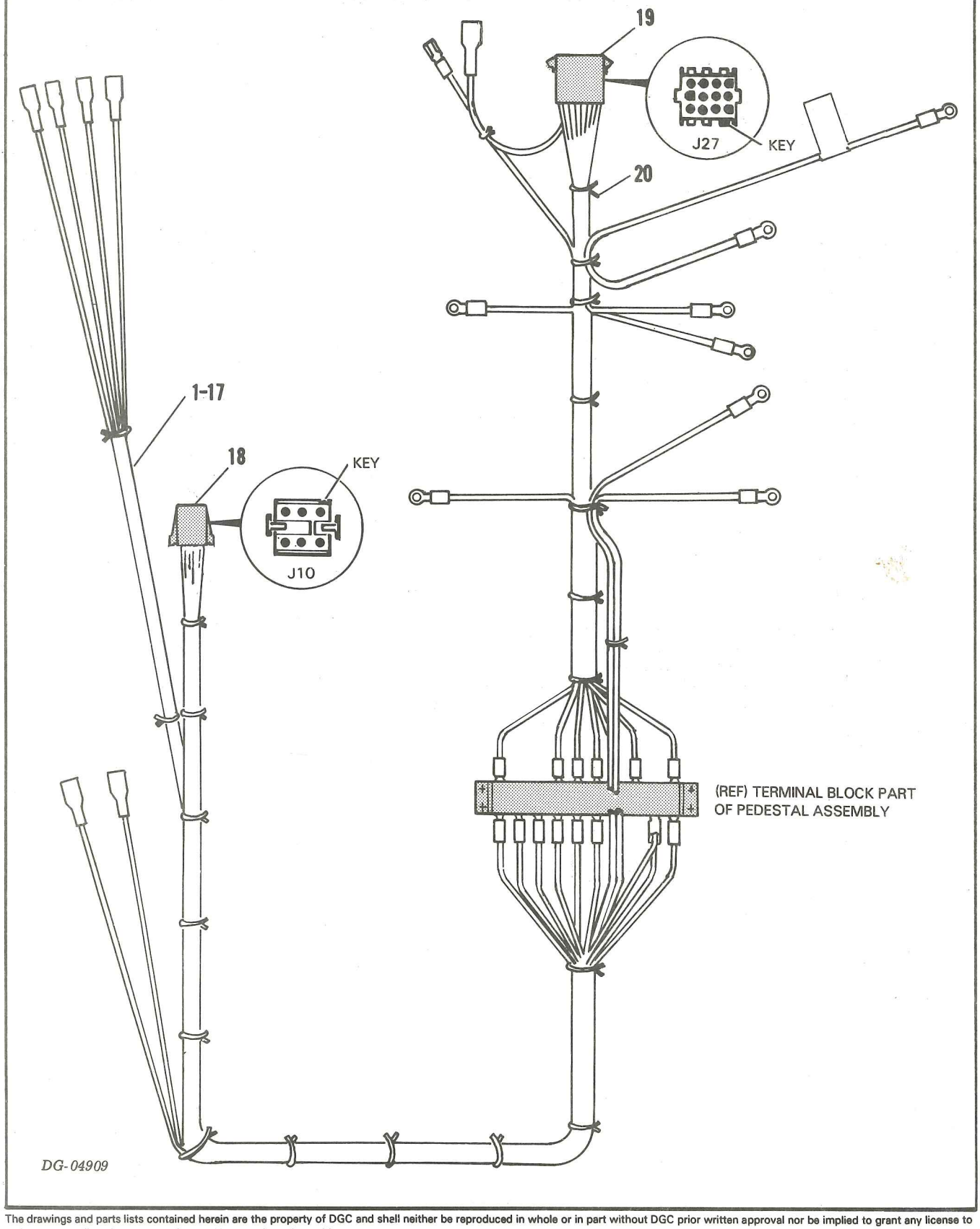

The drawings and parts lists contained herein are the property of DGC and shall neither be reproduced in whole or in part without DGC prior written approval nor be implied to grant any license to make, use, or sell equipment manufactured in accordance herewith.

PAGE & ITEM NO.	DESCRIPTION	QTY	DGC PART NO.	REF PAGE NO.
III-14				
	POWER SUPPLY HARNESS		**005009516**	**III-12 III-42**
1	WIRE TERMINATION	1	029003259	
	WIRE #18 AWG YEL	16"	109000020	
	#6 SPRING SPADE LUG	1	111000680	
	PIN, TERM, AMP	1	111000702	
2	WIRE TERMINATION	1	029003260	
	WIRE #14 GRN	8"	109000031	
	RING LUG #10	1	111000035	
	PIN, TERM, AMP	1	111000702	
3	WIRE TERMINATION	1	029003261	
	WIRE #18 AWG BLU	10"	109000018	
	#8 RING LUG	1	111000141	
	#6 SPRING SPADE LUG	1	111000680	
4	WIRE TERMINATION	1	029003262	
	WIRE #18 AWG BRN	8"	109000131	
	TERM 250 FASTON	1	111000033	
	#8 RING LUG	1	111000141	
5	WIRE TERMINATION	1	029003263	
	WIRE #18 AWG V10	28 1/2	109000132	
	#6 SPRING SPADE LUG	1	111000680	
	PIN, MATE-N-LOCK	1	111000774	
6	WIRE TERMINATION	1	029003264	
	WIRE #18 AWG WHT	14 1/2	109000015	
	#6 SPRING SPADE LUG	1	111000680	
	PIN, TERM. AMP	1	111000703	
7	WIRE TERMINATION	1	029003265	
	WIRE 18 AWG BLU	14 1/2	109000018	
	#6 SPRING SPADE LUG	1	111000680	
	PIN, TERM. AMP	1	111000703	
8	WIRE TERMINATION	1	029003266	
	WIRE #18 AWG WHT	5 1/2	109000015	
	FASTON .187	1	111000588	
	PIN, TERM. AMP	1	111000703	
9	WIRE TERMINATION	1	029003267	
	WIRE #18 AWG RED	7 1/2	109000014	
	#10 RING LUG	1	111000036	
	PIN, TERM. AMP	1	111000703	
10	WIRE TERMINATION	1	029003268	
	WIRE #18 AWG ORN.	14 1/2	109000019	
	#6 SPRING SPADE LUG	1	111000680	
	PIN, TERM. AMP	1	111000703	
11	WIRE TERMINATION	1	029003269	
	WIRE #18 AWG BRN	28 3/8	109000131	
	#6 SPRING SPADE LUG	1	111000680	
	PIN, MATE-N-LOCK	1	111000774	
12	WIRE TERMINATION	1	029003270	
	WIRE #18 AWG WHT	28 3/4	109000015	
	#6 SPRING SPADE LUG	1	111000680	
	PIN MATE-N-LOCK	1	111000774	
13	WIRE TERMINATION	1	029003271	
	WIRE #14 AWG GRN	38 3/4	109000031	
	#10 RING LUG	1	111000035	
	PIN MATE-N-LOCK	1	111000774	
14	WIRE TERMINATION	1	029003272	
	WIRE #18 AWG BLU	36"	109000018	
	FASTON .250	1	111000588	
	#6 SPRING SPADE	1	111000680	
15	WIRE TERMINATION	1	029003273	
	WIRE #18 AWG WHT	36 1/2	109000015	
	FASTON .250	1	111000588	
	#6 SPRING SPADE LUG	1	111000630	

The drawings and parts lists contained herein are the property of DGC and shall neither be reproduced in whole or in part without DGC prior written approval nor be implied to grant any license to make, use, or sell equipment manufactured in accordance herewith.

PAGE & ITEM NO.	DESCRIPTION	QTY	DGC PART NO.	REF PAGE NO.
16	WIRE TERMINATION	1	029003275	
	WIRE #18 AWG ORN	47"	109000019	
	#10 RING LUG	1	111000036	
	FASTON .250	1	111000588	
17	WIRE TERMINATION	1	029003276	
	WIRE #18 AWG ORN	37"	109000019	
	FASTON .250	1	111000588	
	#6 SPRING SPADE LUG	1	111000680	
18	CONNECTOR	1	111000518	
19	CONNECTOR	1	111000703	
20	TYWRAP	24	123000025	

The drawings and parts lists contained herein are the property of DGC and shall neither be reproduced in whole or in part without DGC prior written approval nor be implied to grant any license to make, use, or sell equipment manufactured in accordance herewith.

TRANSFORMER
& TRANSFORMER JUMPER WIRE KIT

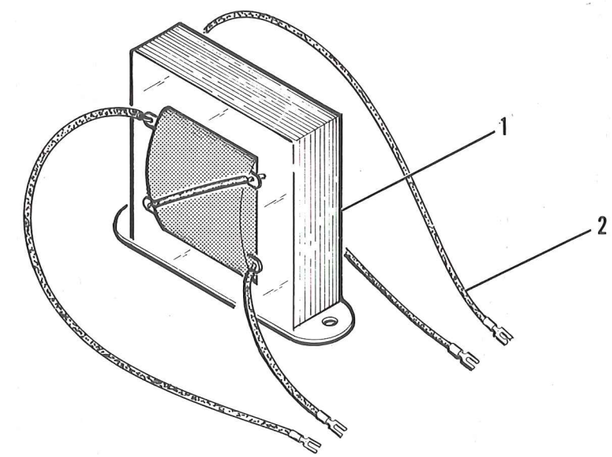

DG-04910

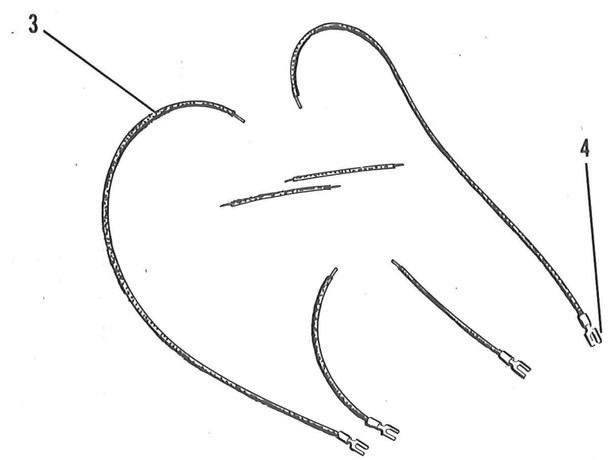

DG-04911

The drawings and parts lists contained herein are the property of DGC and shall neither be reproduced in whole or in part without DGC prior written approval nor be implied to grant any license to make, use, or sell equipment manufactured in accordance herewith.

PAGE & ITEM NO.	DESCRIPTION	QTY	DGC PART NO.	REF PAGE NO.
III-16				
1	**XFMR**	1	**005009523**	III-12
2	**XFMR JUMPER WIRE KIT**	1	**005009524**	
	XFMR F 106Z	1	104000014	
	TRANSFORMER JUMPER WIRE KIT	1	**005009524**	
3	WIRE #18 AWG 19X30 WHT	1	109000015	
4	TERM INSUL SPRING SPADE	6	111000680	

The drawings and parts lists contained herein are the property of DGC and shall neither be reproduced in whole or in part without DGC prior written approval nor be implied to grant any license to make, use, or sell equipment manufactured in accordance herewith.

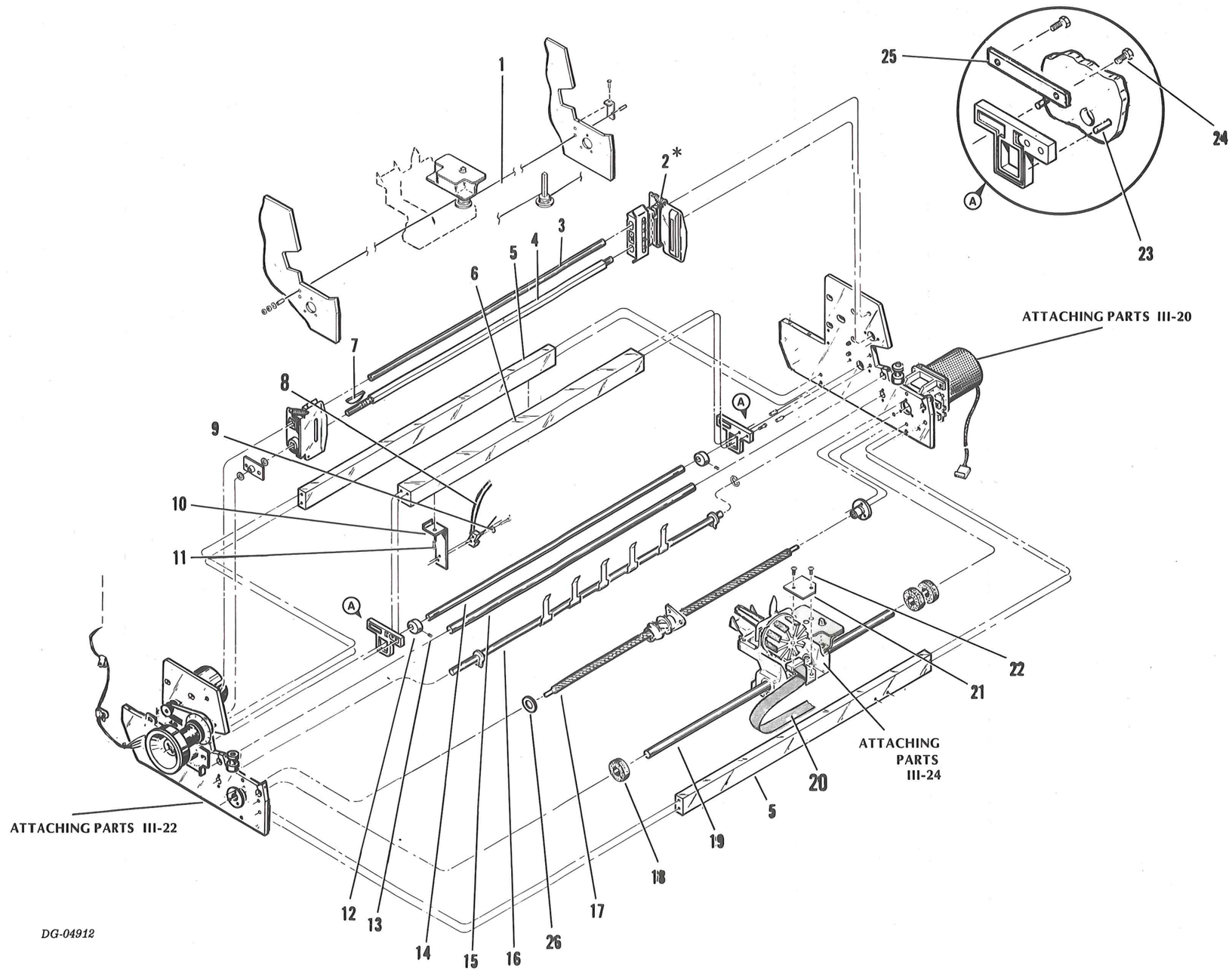

The drawings and parts lists contained herein are the property of DGC and shall neither be reproduced in whole or in part without DGC prior written approval nor be implied to grant any license to make, use, or sell equipment manufactured in accordance herewith.

PAGE & ITEM NO.	DESCRIPTION	QTY	DGC PART NO.	REF PAGE NO.
III-18				
	MECHANISM	1	**005009501**	III-18
	ATTACHING PARTS			III-20
	ATTACHING PARTS			III-22
	ATTACHING PARTS			III-24
1	CABLE CAPSTAN DR	1	118000696	
2*	PIN FEED PAPER HLDG. DEVICE	1	118000699	
3	SUPPORT SHAFT, PRINTER	1	002004121	
4	SHAFT DRIVE DASHER	1	002007016	
5	SPACER FRAME, PRINTER	2	002004122	
6	**PLATEN SERIAL PRINTER**	1	**005006227**	III-26
7	WOODRUFF KEY K1-3	1	123000852	
8	**CABLE, OUT OF FORM SWITCH**	1	**005006406**	III-26 III-42
9	WASHER FLAT #2	2	106000502	
10	SWITCH, BRACKET OUT OF FORM SW.	1	002004159	
11	SCREW PHH PNH SCDP SEMS 8-32X7/16	1	106000086	
12	ECCENTRIC COLLAR, PRINTER	2	002004116	
13	SCREW CUP PT. SET 8-32X1/4	2	106000787	
14	PLATEN ADJ SHAFT PRINTER	1	002004113	
15	GUIDE RAIL PRINTER REAR	1	002004106	
16	PAPER TENSION SPRING	1	002006550	
17	SCREW, LEAD, BI-DIRECTION ASSEMBLY	1	118000675	
18	BUMPER, CARRIAGE	3	002006167	
19	RAIL GUIDE, FRONT	1	002007448	
20	**PRINT HEAD TO DRIVER CABLE**	1	**005009575**	III-38 III-42
21	CLAMP CABLE	1	002006133	
22	SCREW SLTD RDH SELF TAP #6 X 1/2	2	106000689	
23	PIN, DOWEL	4	123000994	
24	SCREW HEX WASH. HD PLASTITE	4	106000868	
25	BAR NYLON	2	002006458	
26	SHIM WASHER	A/R	123000992	
	CLUTCH PULLEY 6040-43 } INFORMATION NOT AVAILABLE	1	002006459	
	SCREW PHH PNH PLASTITE #4X1/2 } INFORMATION NOT AVAILABLE	2	106000852	
	*GENUINE PARTS TRACTORS USED ON MODELS GP 6075, GP 6086	1	118001043	

The drawings and parts lists contained herein are the property of DGC and shall neither be reproduced in whole or in part without DGC prior written approval nor be implied to grant any license to make, use, or sell equipment manufactured in accordance herewith.

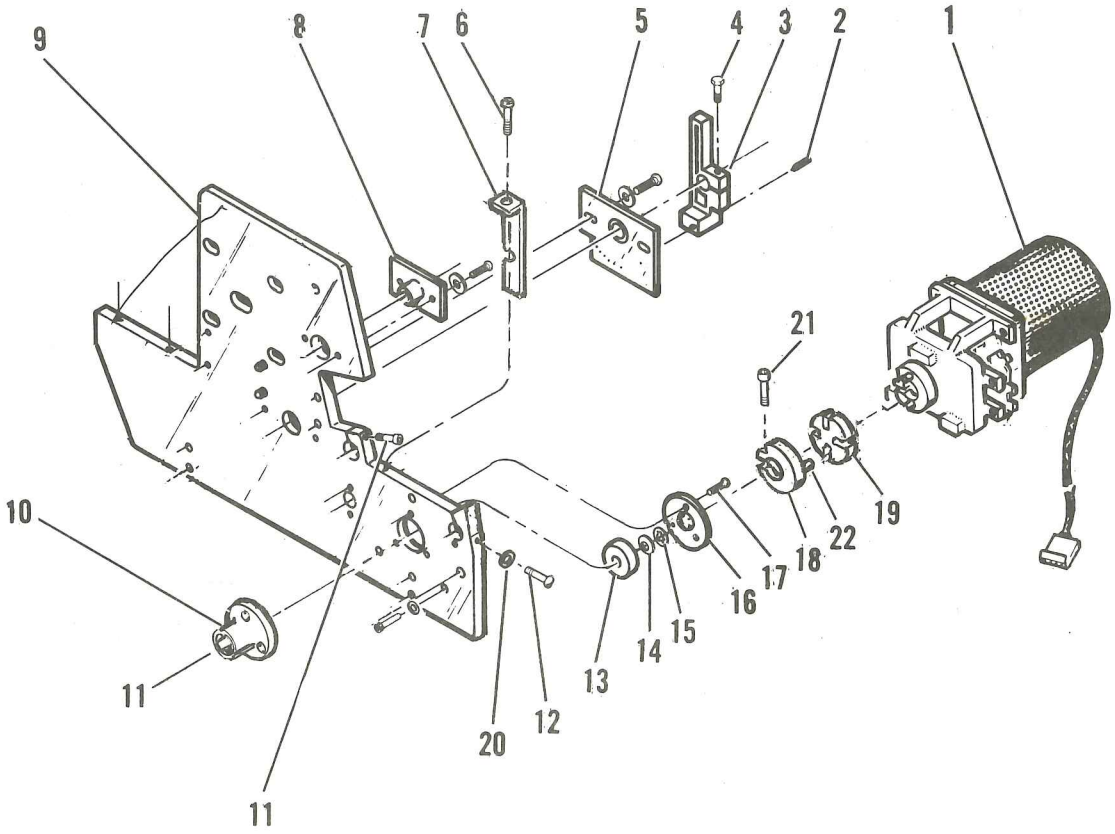

DG-04965

The drawings and parts lists contained herein are the property of DGC and shall neither be reproduced in whole or in part without DGC prior written approval nor be implied to grant any license to make, use, or sell equipment manufactured in accordance herewith.

PAGE & ITEM NO.	DESCRIPTION	QTY	DGC PART NO.	REF PAGE NO.
III-20				
	MECH. (ATTACHING PARTS)		005009501	III-18
1	CARRIAGE DRIVE	REF		III-32
2	SPRING PLUNGER 8-32X5/8	1	123000867	
3	PLATEN ADJUST LEVER, PRINTER	1	002004115	
4	HEX WASHER HD 4-20X3/4	1	106000867	
5	DETENT FLANGE PRINTER	1	002004133	
6	SCREW PHH PNH SEMS 8-32X1/4	1	106000083	
7	KEEPER, CABLE	1	002006168	
8	BEARING FLANGE, PRINTER	1	002004132	
9	END PLATE	1	002006173	
10	RETAINER, BUMPER PRINTER	1	002004103	
11	SCREW SCH. CAP #6-32 X 5/8	1	106000786	
12	SCREW 6-32 X 3/8 SOLID BRASS	2	106001034	
13	BALL BEARING	1	123000842	
14	WAVY WSHR SV-9	1	123000843	
15	SPACER BEARING	A/R	123000993	
16	RETAINER BEARING, PRINTER	1	002004104	
17	SCREW SLTD. BIND.HD. 4-40X1/2	6	106000282	
18	CLAMP COUPLING SHAFT	1	002007928	
19	SLIDE COUPLING	1	002006166	
20	WASHER LK SPLIT MED #6	1	106000691	
21	SCREW, CAP, BL. OXIDE 4-40 X 3/8	1	106000670	
22	PIN LOCK DOWEL 3/16 X .5	1	123001255	

The drawings and parts lists contained herein are the property of DGC and shall neither be reproduced in whole or in part without DGC prior written approval nor be implied to grant any license to make, use, or sell equipment manufactured in accordance herewith.

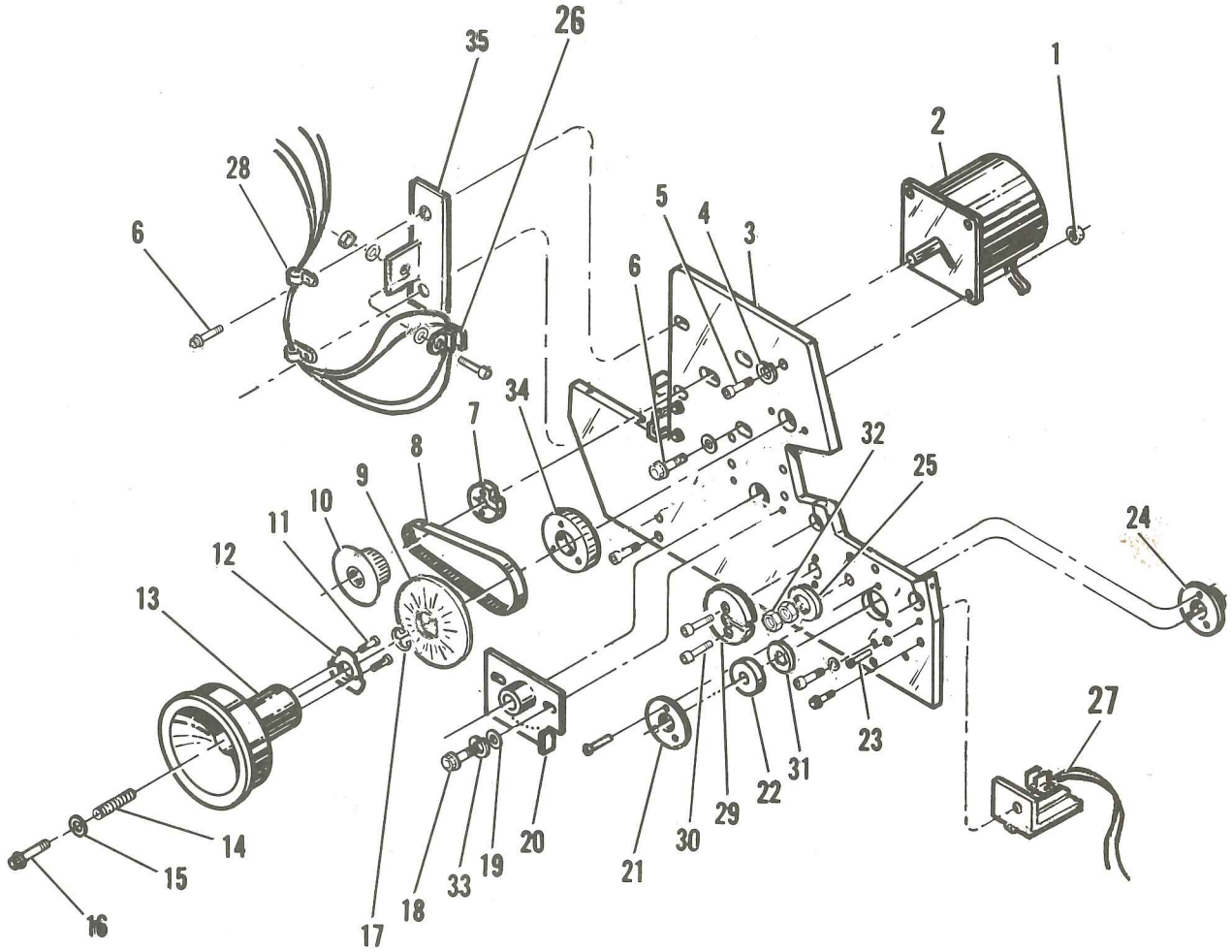

DG-04966

The drawings and parts lists contained herein are the property of DGC and shall neither be reproduced in whole or in part without DGC prior written approval nor be implied to grant any license to make, use, or sell equipment manufactured in accordance herewith.

PAGE & ITEM NO.	DESCRIPTION	QTY	DGC PART NO.	REF PAGE NO.
III-22				
	MECH. (ATTACHING PARTS)		**005009501**	**III-18**
1	NUT HEX KEP 8-32	4	106000255	
2	**PAPER FEED MOTOR**	**1**	**005009508**	**III-28 III-42**
3	PLATE END	1	002006173	
4	WASHER LK SPLIT #8	4	106000746	
5	SCREW BL. OXIDE 8-32X5/8	13	106000863	
6	SCREW CAP SCH SCDP 8-32X3/4	4	106000436	
7	CLAMP PAPER TENSION SHAFT	1	002004134	
8	BELT, TIMING	1	123000946	
9	DISK SECTOR (REG. PRINT)	1	002006148	
10	PULLEY TIMING BELT	1	002006551	
11	SCREW PHH PNH PLASTITE 2-22X1/4	5	106000869	
12	CLUTCH PLATE	1	002006548	
13	KNOB ADJUSTMENT	1	002004146	
14	SPRING COMPRESSION, KNOB	1	123000851	
15	WASHER FLAT #8	4	106000264	
16	SCREW SCH FLH BL. OXIDE 4-40X3/8	1	106000603	
17	RETAINING RING 1/4	1	123000858	
18	SCREW CAP SCH SCDP 6-32X3/8	8	106000454	
19	WASHER FLAT #6	6	106000461	
20	DETENT FLANGE PRINTER	1	002004133	
21	RETAINER BEARING PRINTER	1	002004104	
22	BALL BEARING	1	123000842	
23	SCREW PLASTITE #8 X 1/2	1	106000865	
24	RETAINER, BUMPER PRINTER	1	002004103	
25	WASHER BELLVILLE SPRING	1	123001256	
26	**PAPER FEED TRANSDUCER CABLE**	**1**	**005009591**	**III-36 III-42**
27	**HOME TRANSDUCER CABLE**	**1**	**005009588**	**III-36 III-42**
28	CLAMP CABLE 1/8	2	123000101	
29	CLAMP PAPER TENSION, SHAFT	1	002004134	
30	SCREW 6-32 X 1/2	2	106000699	
31	SPACER SHAFT (SHIM)	A/R	123000992	
32	NUT, 6-32	2	106000261	
33	LK. WASHER #6	4	106000691	
34	CLUTCH PULLEY	1	002006549	
35	TRANSDUCER BRACKET	1	002006990	

The drawings and parts lists contained herein are the property of DGC and shall neither be reproduced in whole or in part without DGC prior written approval nor be implied to grant any license to make, use, or sell equipment manufactured in accordance herewith.

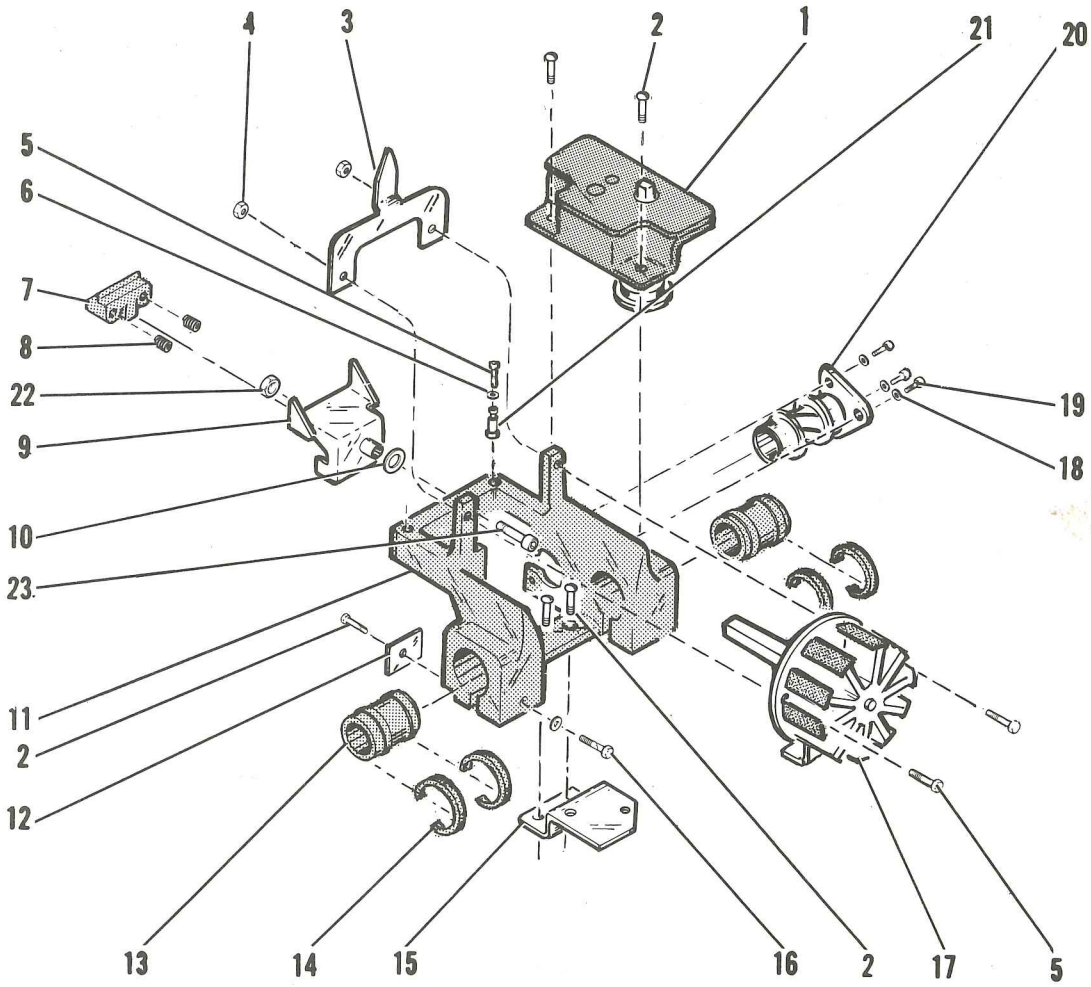

DG-04967

The drawings and parts lists contained herein are the property of DGC and shall neither be reproduced in whole or in part without DGC prior written approval nor be implied to grant any license to make, use, or sell equipment manufactured in accordance herewith.

PAGE & ITEM NO.	DESCRIPTION	QTY	DGC PART NO.	REF PAGE NO.
	MECH. (ATTACHING PARTS)		005009501	III-18
1	RIBBON DRIVE	1	005009509	III-30
2	SCREW PHH PNH SEMS 6-32X1/4	5	106000479	
3	INDICATOR COLUMN	1	002006156	
4	NUT HEX KEP 4-40	2	106000257	
5	SCREW SCH CAP SCDP 4-40X1/2	3	106000482	
6	O-RING NEOPRENE	2	123001267	
7	SLIDE BEARING REAR	1	002006169	
8	SPRING COMPRESSION	2	123001330	
9	BEARING REAR	1	002006128	
10	WASHER BELLVILLE SPRING	1	123001260	
11	CARRIAGE	1	002006126	
12	FLAG HOME	1	002006135	
13	LINEAR BEARING .500 DIA	2	123001321	
14	RING RETAINER 7/8 OD	4	123001264	
15	BRACKET CABLE	1	002006132	
16	SCREW SCH CAP BLK OXIDE 6-32X3/4	2	106000540	
17	PRINTHEAD, MODIFIED	1	118000573	
18	WASHER LK. SPLIT #8 MED.	8	106000746	
19	SCREW SOC. HD 8-32X3/8	3	106000453	
20	SCREW LEAD, BI-DIRECTION ASSEMBLY	1	118000675	
21	STUD-O-RING	2	002006129	
22	KEP NUT 6-32	1	106000256	
23	SCREW SOC. HEAD 6-32 X 5/8	1	106000787	

The drawings and parts lists contained herein are the property of DGC and shall neither be reproduced in whole or in part without DGC prior written approval nor be implied to grant any license to make, use, or sell equipment manufactured in accordance herewith.

PLATEN SERIAL PRINTER
& CABLE OUT OF FORMS SWITCH

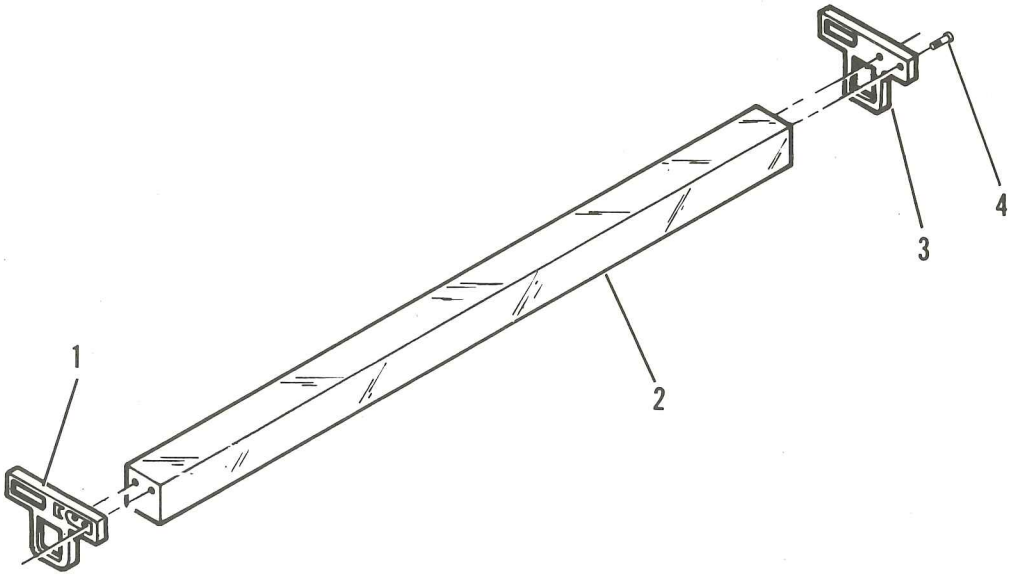

DG-04913

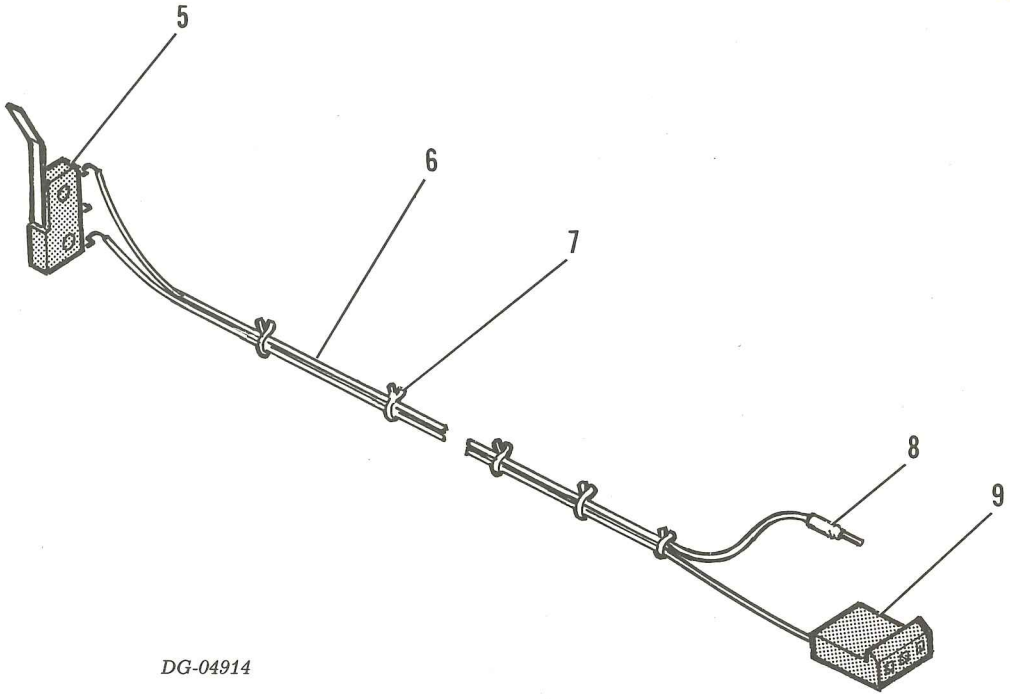

DG-04914

The drawings and parts lists contained herein are the property of DGC and shall neither be reproduced in whole or in part without DGC prior written approval nor be implied to grant any license to make, use, or sell equipment manufactured in accordance herewith.

PAGE & ITEM NO.	DESCRIPTION	QTY	DGC PART NO.	REF PAGE NO.
III-26				
	PLATEN SERIAL PRINTER	**1**	**005006227**	**III-18**
1	PLATEN SLIDE LH, PRINTER	1	002004112	
2	PLATEN, PRINTER	1	002004110	
3	PLATEN SLIDE, RH, PRINTER	1	002004111	
4	SCR CAP SCH SCDP 8-32X3/8	4	106000453	
III-26				
	CA OUT OF FORM SWITCH SER PTR	**1**	**005006406**	**III-18 III-42**
5	SWITCH E63-61HB	1	002006235	
6	WIRE TERMINATION	2	029001954	
	WIRE #22 AWG 19X34 WHT	1	109000009	
	TERMINAL 18X24 AWG	1	111000518	
7	STD PRT SSTIM 3/4"	5	123000025	
8	SLEEVING 3/32" HEAT SHRINK	1	109000098	
9	CONN PCB MOLEX 09-50-3021	1	111000562	

The drawings and parts lists contained herein are the property of DGC and shall neither be reproduced in whole or in part without DGC prior written approval nor be implied to grant any license to make, use, or sell equipment manufactured in accordance herewith.

PAPER FEED MOTOR & CARRIAGE MOTOR

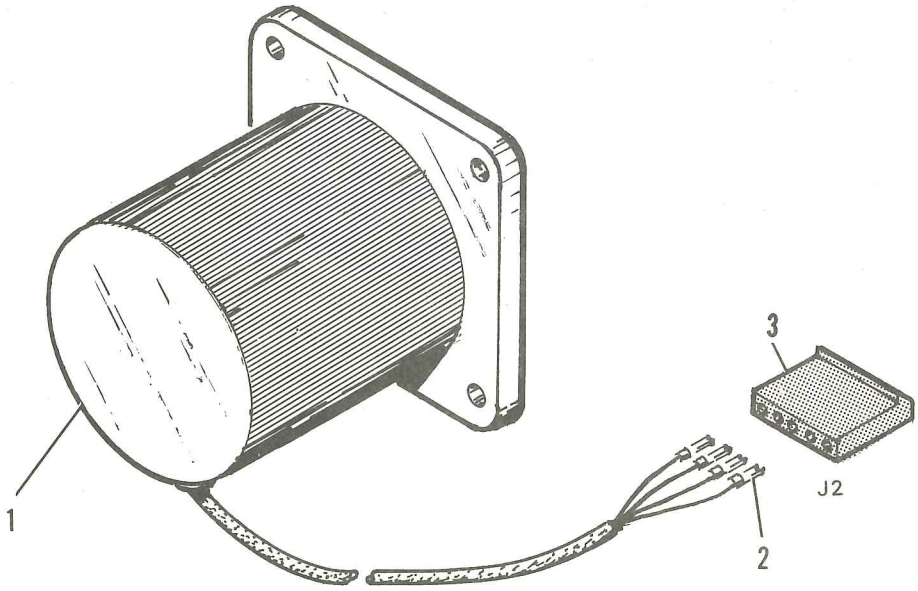

DG-04915

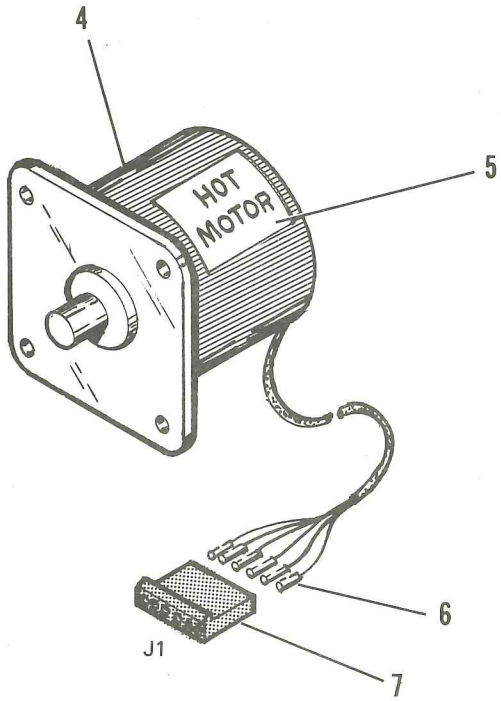

DG-04916

The drawings and parts lists contained herein are the property of DGC and shall neither be reproduced in whole or in part without DGC prior written approval nor be implied to grant any license to make, use, or sell equipment manufactured in accordance herewith.

PAGE & ITEM NO.	DESCRIPTION	QTY	DGC PART NO.	REF PAGE NO.
III-28				
	PAPER FEED MOTOR	**1**	**005009508**	**III-22**
1	MOTOR STEPPING 7.5DEG PUR ASSY	1	115000147	
2	TERM 2478 18-24AWG MOLEX 08-50-0105	4	111000578	
*3	CONN HSG 5P MOLEX 09-50-305	1	111000662	
III-28				
	CARRIAGE MOTOR	**1**	**005009511**	**III-32**
4	MOTOR STEPPING 2.5 DEGREE	1	115000155	
5	LBL HOT MOTOR	1	002008174	III-40
6	TERM 2478 18-24AWG MOLEX 08-50-0105	6	111000578	
7	CONN PCB MOLEX 09-50-3061	1	111000565	

The drawings and parts lists contained herein are the property of DGC and shall neither be reproduced in whole or in part without DGC prior written approval nor be implied to grant any license to make, use, or sell equipment manufactured in accordance herewith.

RIBBON DRIVE

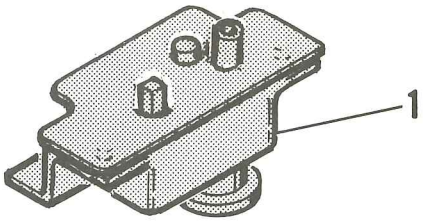

DG-04917

RIBBON CARTRIDGE

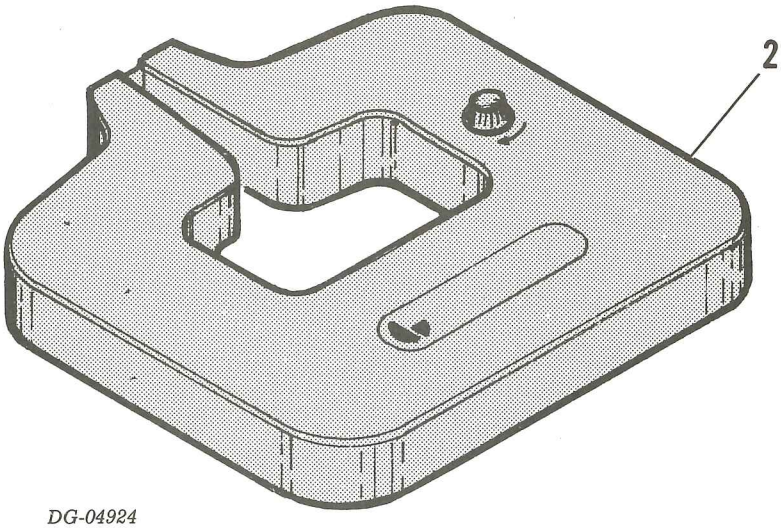

DG-04924

The drawings and parts lists contained herein are the property of DGC and shall neither be reproduced in whole or in part without DGC prior written approval nor be implied to grant any license to make, use, or sell equipment manufactured in accordance herewith.

PAGE & ITEM NO.	DESCRIPTION	QTY	DGC PART NO.	REF PAGE NO.
III-30 1	RIBBON DRIVE	1	005009509	III-24
III-30 2	RIBBON CARTRIDGE	1	005009507	III-2
	BOX OF 12	REF	005010020	

The drawings and parts lists contained herein are the property of DGC and shall neither be reproduced in whole or in part without DGC prior written approval nor be implied to grant any license to make, use, or sell equipment manufactured in accordance herewith.

CARRIAGE DRIVE
(WITH NORMAL PRINT DISC & TRANSDUCERS)

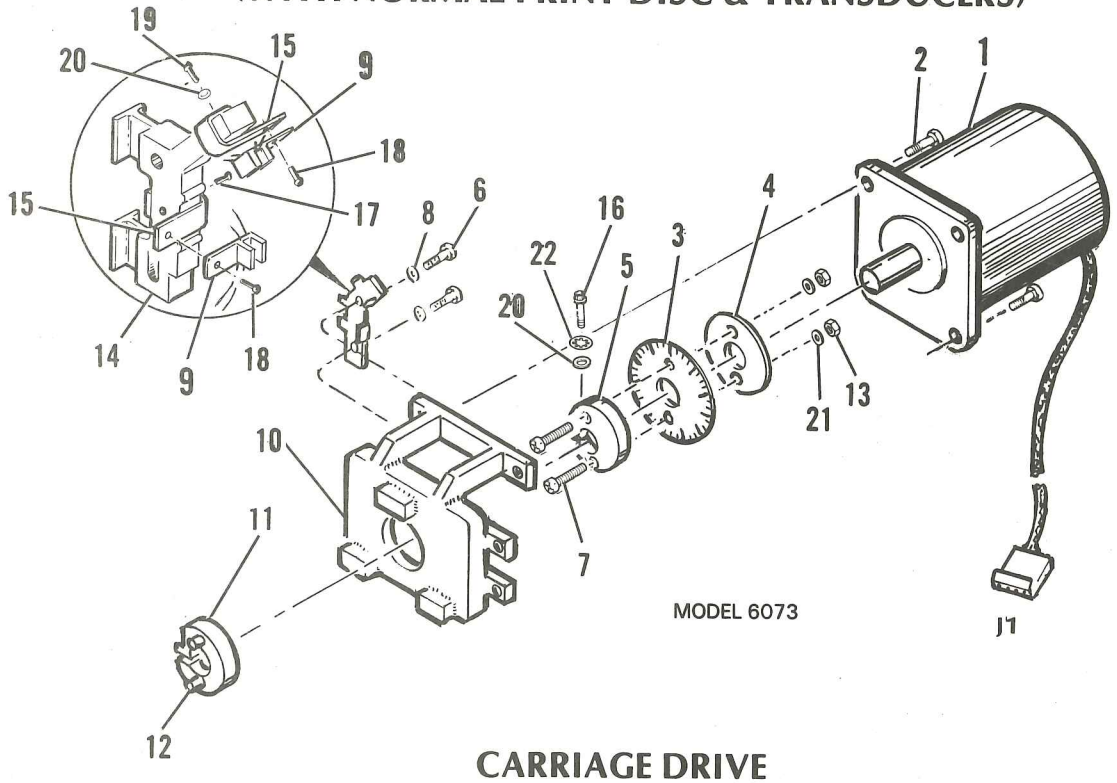

CARRIAGE DRIVE
(WITH NORMAL & COMPRESSED PRINT & TRANSDUCERS)

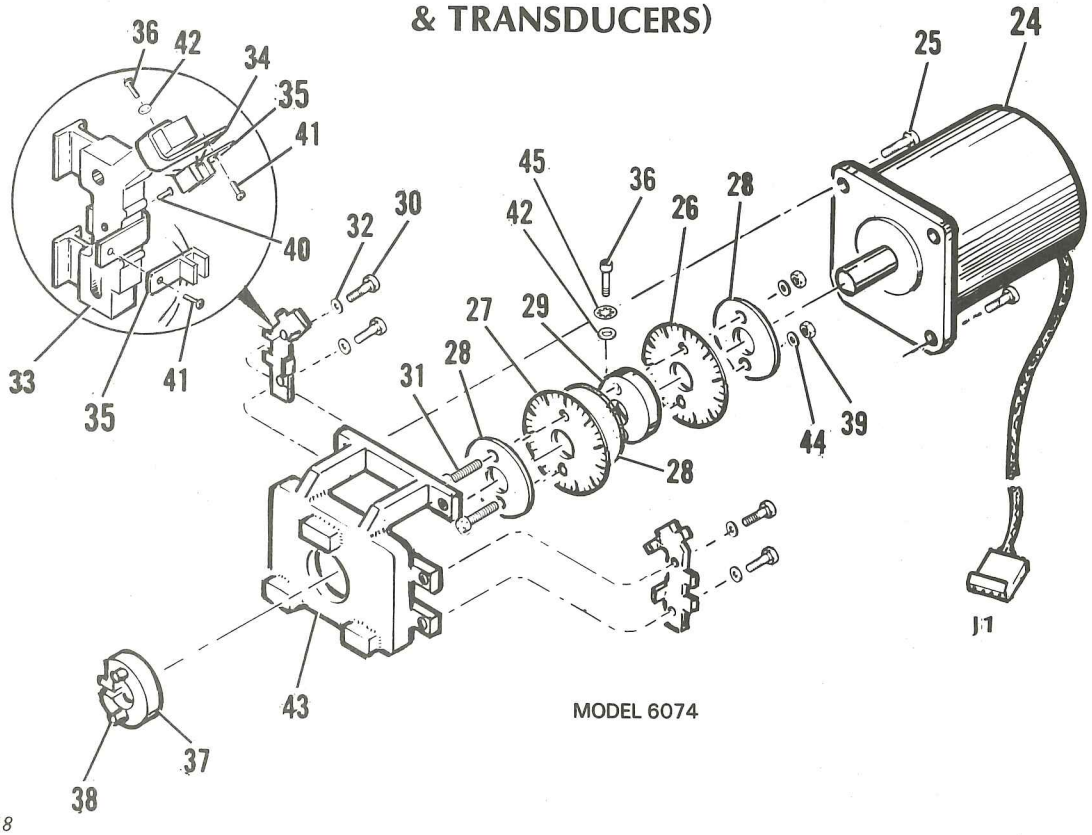

DG-04918

The drawings and parts lists contained herein are the property of DGC and shall neither be reproduced in whole or in part without DGC prior written approval nor be implied to grant any license to make, use, or sell equipment manufactured in accordance herewith.

PAGE & ITEM NO.	DESCRIPTION	QTY	DGC PART NO.	REF PAGE NO.
III-32				
	CARRIAGE DRIVE	1	**005009510**	III-20
1	**CARRIAGE MOTOR**	1	**005009511**	III-28 III-42
2	SCR PHH PNH SCDP SEM 10-32 X 3/8	4	106000106	
3	DISK SECTOR (REG. PRINT)	1	002006148	
4	GIB DISK	1	002006155	
5	CLAMP DISK	1	002006154	
6	SCR PHH PNH SCDP SEMS 6-32 X 1/2	4	106000546	
7	SCR PHH PNH SCDP 4-40 X 9/16	2	106000065	
8	WASHER FLAT #6.156 X .375 X 049	4	106000461	
9	**TRANSDUCER**	1	**005009591**	III-34 III-42
10	BRKT. MOTOR	1	002006151	
11	CLAMP, COUPLING MOTOR	1	002007927	
12	PIN LOCK DOWEL 3/16 DIA. X .5 LG.	2	123001255	
13	HEX NUT KEP SCDP 4-40	2	106000257	
14	BAR MTG. TRANSDUCER	1	002006152	
15	MOUNT TRANSDUCER	2	002006153	
16	SCR CAP BL. OXIDE #2-56 X 1/2	1	106001489	
17	HEX WSHR HD. PLASTITE 4-20 X 3/8	1	106000842	
18	SCR PHH PNH PLASTITE 4-20 X 1/4	2	106001035	
19	SCR CAP BL. OXIDE 2-56 X 1/2	1	106001489	
20	WASHER FLAT #2	2	106000502	
21	WASH. FL. #4	2	106000265	
22	WASHER INT. TOOTH #2	2	106000267	
III-32				
	CARRIAGE DRIVE COND. PRINT	1	**005010007**	III-20
24	**CARRIAGE MOTOR**	1	**005009511**	III-28, III-42
25	SCREW PHH PNH SCDP SEM 10-32 X 3/8	4	106000106	
26	DISK SECTOR (REG PRINT)	1	002006148	
27	DISK SECTOR (COND PRINT)	1	002006149	
28	GIB DISK	3	002006155	
29	CLAMP DISK	1	002006154	
30	SCR PHH PNH SCDP SEMS 6-32 X 7/16	4	106000546	
31	SCR PHH PNH SCDP 4-40 X 9/16	2	106000065	
32	WSHR FL. #6.156 X .375 X .049	4	106000461	
33	BAR MTG TRANSDUCER	1	002006152	
34	MOUNT TRANSDUCER	1	002006153	
35	**TRANSDUCER**	2	**005009591**	III-34, III-42
36	SCR CAP BL OXIDE 2-56 X 1/2	3	106001489	
37	CLAMP COUPLING MOTOR	1	002007927	
38	PIN LK DOWEL 3/16 DIA X .5 LG.	4	123001255	
39	HEX NUT KEP SCDP 4-40	2	106000257	
40	HEX WASH HD. PLASTITE SCDP 4-20 X 3/8	1	106000842	
41	SCR PHH PNH PLASTITE SCDP 4-20 X 1/4	2	106001035	
42	WASHER FLAT #2	2	106000502	
43	BRKT MOTOR	1	002006151	
44	WASHER FL #4	2	106000265	
45	WASHER INT. TOOTH #2	2	106000267	

The drawings and parts lists contained herein are the property of DGC and shall neither be reproduced in whole or in part without DGC prior written approval nor be implied to grant any license to make, use, or sell equipment manufactured in accordance herewith.

TRANSDUCER ASSEMBLY
COMPRESSED ASSEMBLY

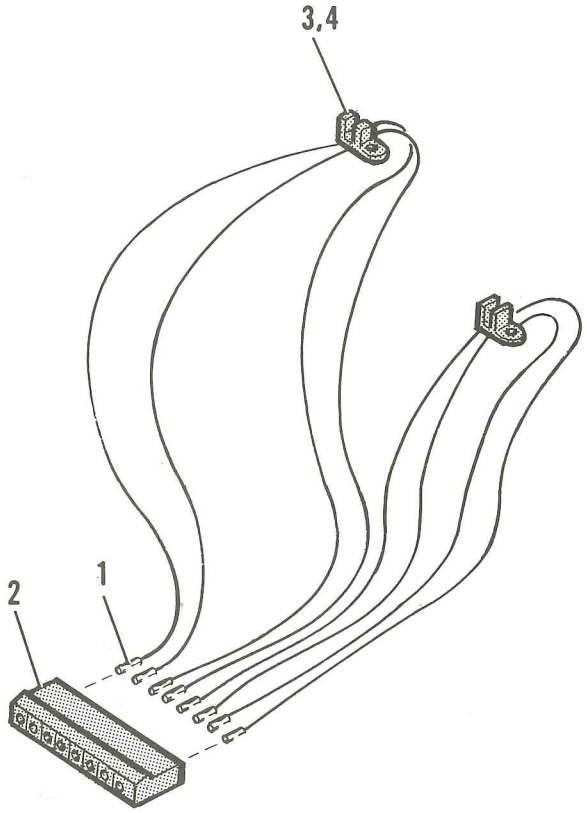

DG-04920

The drawings and parts lists contained herein are the property of DGC and shall neither be reproduced in whole or in part without DGC prior written approval nor be implied to grant any license to make, use, or sell equipment manufactured in accordance herewith.

PAGE & ITEM NO.	DESCRIPTION	QTY	DGC PART NO.	REF PAGE NO.
III-34				
	TRANSDUCER ASSEMBLY	1	005009513	III-32 III-42
1	TERMINAL 18-24 AWG	8	111000578	
2	CONN P.C.B.	1	111000566	
3	TRANSDUCER OPTICAL	2	118000513	
	COMPRESSED ASSEMBLY	1	005012914	
1	TERMINAL 18-24 AWG	8	111000578	
2	CONN P.C.B.	1	111000566	
4	TRANSDUCER OPTICAL	2	118001120	

The drawings and parts lists contained herein are the property of DGC and shall neither be reproduced in whole or in part without DGC prior written approval nor be implied to grant any license to make, use, or sell equipment manufactured in accordance herewith.

HOME TRANSDUCER CABLE & PAPER FEED TRANSDUCER

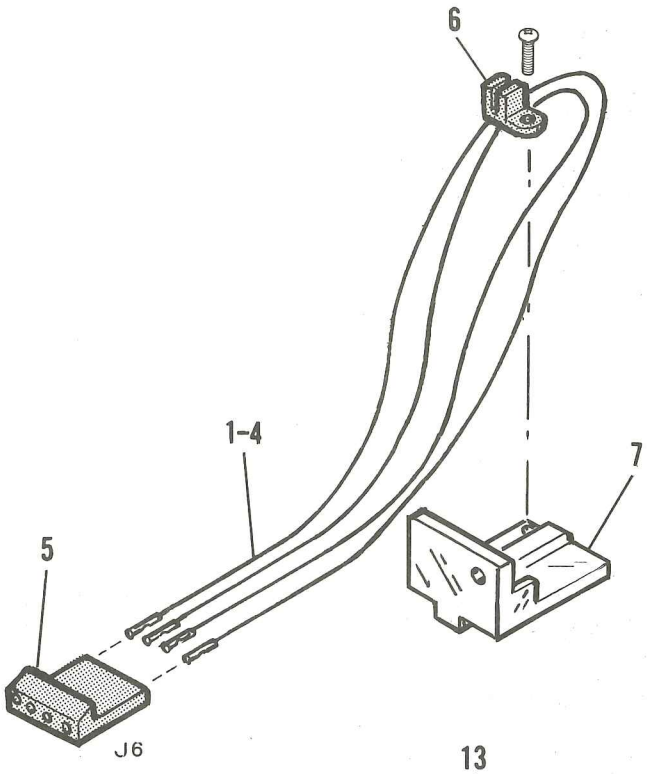

DG-04921

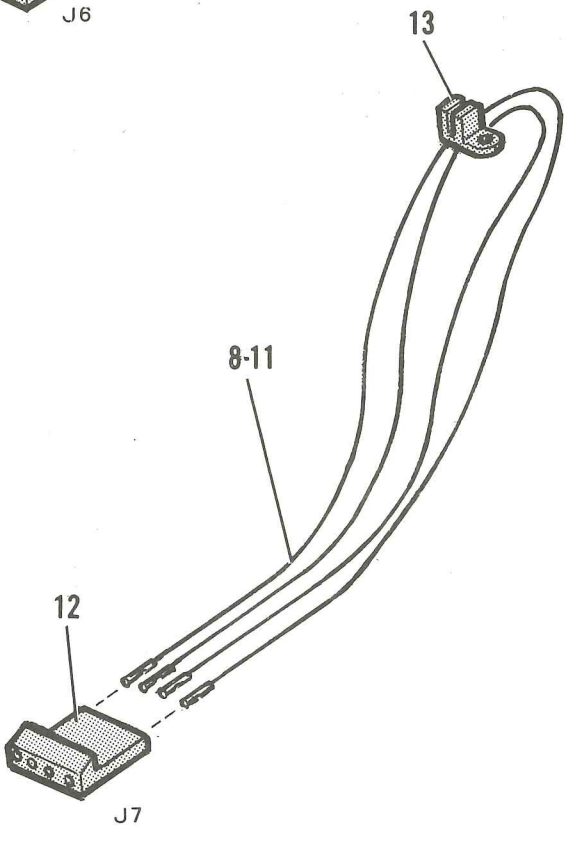

DG-04922

The drawings and parts lists contained herein are the property of DGC and shall neither be reproduced in whole or in part without DGC prior written approval nor be implied to grant any license to make, use, or sell equipment manufactured in accordance herewith.

PAGE & ITEM NO.	DESCRIPTION	QTY	DGC PART NO.	REF PAGE NO.
III-36				
	HOME TRANDUCER CABLE	**1**	**005009588**	**III-22 III-42**
1	WIRE TERMINATION		029003025	
	WIRE #22AWG 19X34 GREEN I/PVC 3.16LG	1	109000011	
	TERM 2478 18-24AWG MOLEX 08-50-0105	1	111000578	
2	WIRE TERMINATION		029003026	
	WIRE #22AWG 19X34 ORANGE I/PVC 2.82LG	1	109000013	
	TERM 2478 18-24AWG MOLEX 08-50-0105	1	111000578	
3	WIRE TERMINATION		029003027	
	WIRE #22AWG 19X34 WHITE I/PVC 12.26LG	1	109000009	
	TERM 2478 18-24AWG MOLEX 08-50-0105	1	111000578	
4	WIRE TERMINATION		029003028	
	WIRE #22AWG 19X34 BLUE I/PVC 3.87LG	1	109000012	
	TERM 2478 18-24AWG MOLEX 08-50-0105	1	111000578	
5	CONN PCB MOLEX 09-50-3041	1	111000564	
6	XDCR, OPTICAL	1	118000513	
7	BRACKET		002006157	
III-36				
	PAPER FEED TRANSDUCER CABLE	**1**	**005009591**	**III-22 III-42**
8	WIRE TERMINATION		029003025	
	WIRE #22AWG 19X34 GREEN I/PVC 3.16LG	1	109000011	
	TERM 2478 18-24AWG MOLEX 08-50-0105	1	111000578	
9	WIRE TERMINATION		029003026	
	WIRE #22AWG 19X34 ORANGE I/PVC 2.82LG	1	109000013	
	TERM 2478 18-24AWG MOLEX 08-50-0105	1	111000578	
10	WIRE TERMINATION		029003027	
	WIRE #22AWG 19X34 WHITE I/PVC 12.26LG	1	109000009	
	TERM 2478 18-24AWG MOLEX 08-50-0105	1	111000578	
11	WIRE TERMINATION		029003028	
	WIRE #22AWG 19X34 BLUE I/PVC 3.87LG	1	109000012	
	TERM 2478 18-24AWG MOLEX 08-50-0105	1	111000578	
12	CONN PCB MOLEX 09-50-3041	1	111000564	
13	XDCR, OPTICAL	1	118000513	

The drawings and parts lists contained herein are the property of DGC and shall neither be reproduced in whole or in part without DGC prior written approval nor be implied to grant any license to make, use, or sell equipment manufactured in accordance herewith.

PRINT HEAD TO DRIVE CABLE

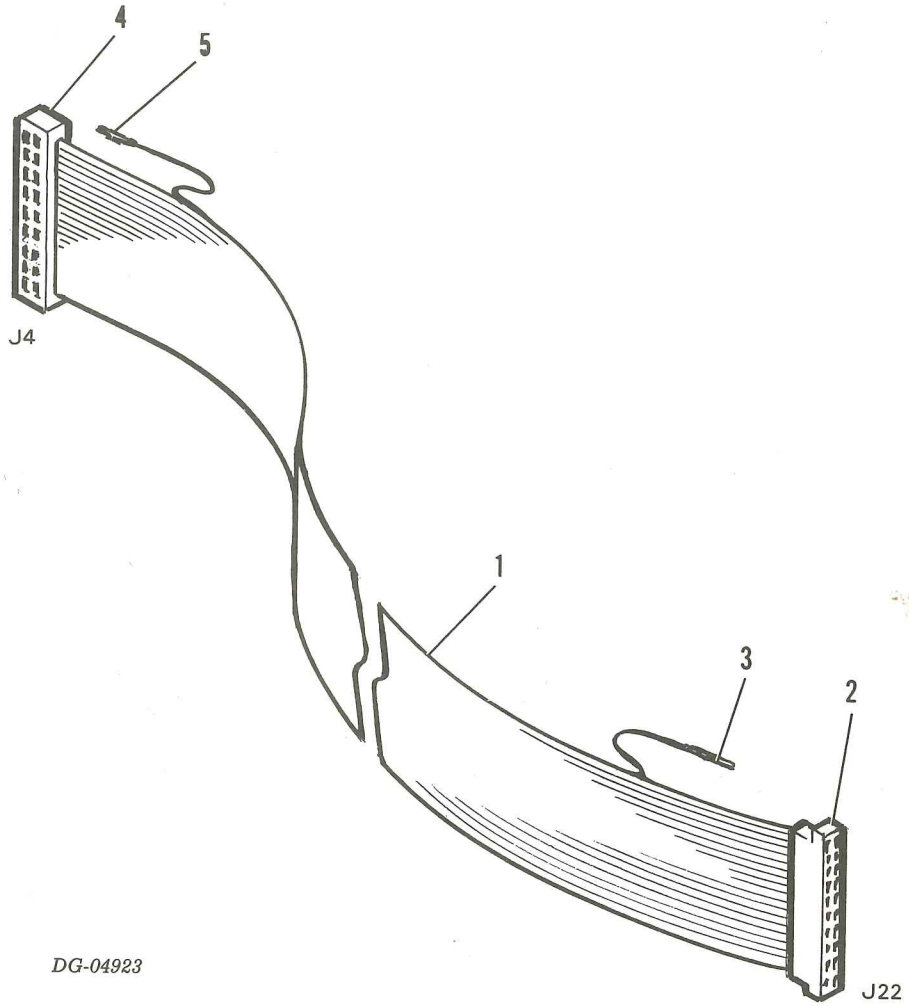

The drawings and parts lists contained herein are the property of DGC and shall neither be reproduced in whole or in part without DGC prior written approval nor be implied to grant any license to make, use, or sell equipment manufactured in accordance herewith.

PAGE & ITEM NO.	DESCRIPTION	QTY	DGC PART NO.	REF PAGE NO.
III-38				
	PRINT HEAD TO DRIVE CABLE	1	005009575	III-18 III-42
1	CABLE 20 COND	1	109000321	
2	CONN CABLE	1	111000027	
3	CONN AMP	20	111000058	
4	CONN P.C. EDGE	1	111000119	
5	CONN CONT TW LEAF	20	111000343	

The drawings and parts lists contained herein are the property of DGC and shall neither be reproduced in whole or in part without DGC prior written approval nor be implied to grant any license to make, use, or sell equipment manufactured in accordance herewith.

1

CAUTION

USE ONLY DATA GENERAL RECOMMENDED RIBBON CARTRIDGES — P/N 005009507

USE OF NON-RECOMMENDED RIBBONS CAN RESULT IN PRINTHEAD DAMAGE

2

CAUTION
HOT
MOTOR

3

DANGER
HIGH
VOLTAGE

DG-04927

The drawings and parts lists contained herein are the property of DGC and shall neither be reproduced in whole or in part without DGC prior written approval nor be implied to grant any license to make, use, or sell equipment manufactured in accordance herewith.

PAGE & ITEM NO.	DESCRIPTION	QTY	DGC PART NO.	REF PAGE NO.
III-40				
1	LABEL "RIBBON CORRECT CTG."	1	002007938	III-2
2	LABEL "HOT MOTOR"	1	002008174	III-2 III-28
3	LABEL "DANGER HIGH VOLTAGE"	1	002003044	III-2

The drawings and parts lists contained herein are the property of DGC and shall neither be reproduced in whole or in part without DGC prior written approval nor be implied to grant any license to make, use, or sell equipment manufactured in accordance herewith.

CABLE ROUTING DIAGRAM

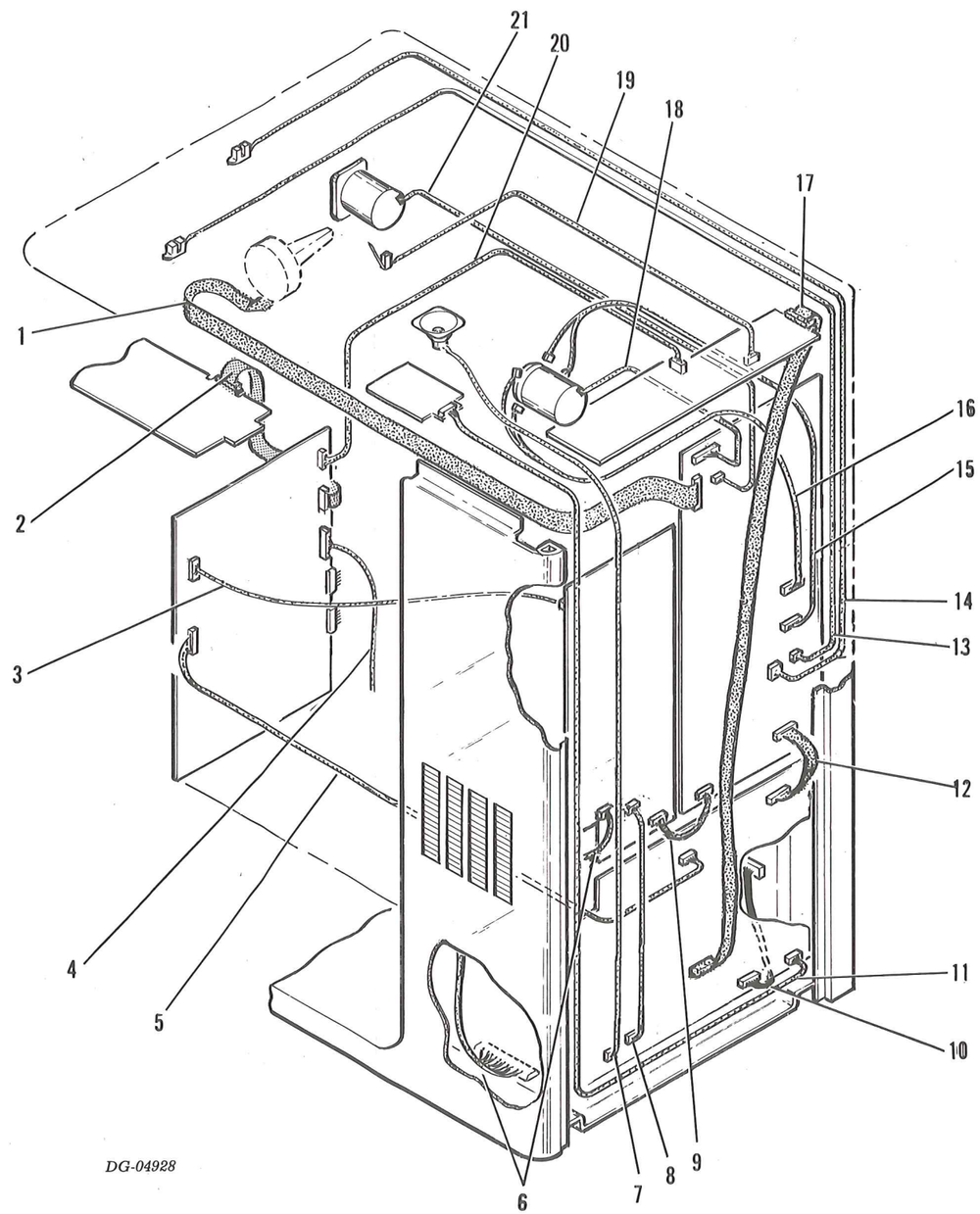

PAGE & ITEM NO.	DESCRIPTION	QTY	DGC PART NO.	REF PAGE NO.
	CABLE ROUTING DIAGRAM			
1	PRINT HD. TO DRIVER	1	005009575	III-2
2	* CONTROL LOGIC TO KEYBOARD	1	005009577	
3	* P/S TO OPTION P.C.B.	1	005009592	
4	* PRINT HD. TO DRIVER	1	005009597	
5	* TO CONTROL P.C.B.	1	005009594	
6	POWER SUPPLY HARNESS	1	005009516	
7	CONTROL LOGIC TO BELL	1	005009576	
8	POWER SUPPLY TO CONTROL LOGIC	1	005009578	
9	P/S TO DRIVER	1	005009579	
10	CONTROL TO PAR. I/O	1	005009596	
11	CONTROL LOGIC TO CONT. PNL.	1	005009582	
12	DRIVER TO CONTROL LOGIC	1	005009580	
13	HOME TRANSDUCER	1	005009588	
14	PAPER FEED TRANSDUCER	1	005009591	
15	MOUNTED TRANSDUCER	1	005009513	
16	MOUNTED TRANSDUCER (COMPRESSED PRINT ONLY)	1	005009513	
17	CONTROL LOGIC TO SEC. CONTROL	1	005009581	
18	CARRIAGE MOTOR	1	005009511	
19	OUT OF FORMS SWITCH SER. P.T.R.	1	005006406	
20	* TO SEC. CONT. PANEL	1	005009593	
21	PAPER FEED MOTOR	1	005009508	
	*** OPTION**			

The drawings and parts lists contained herein are the property of DGC and shall neither be reproduced in whole or in part without DGC prior written approval nor be implied to grant any license to make, use, or sell equipment manufactured in accordance herewith.

INTERCONNECTION DIAGRAM

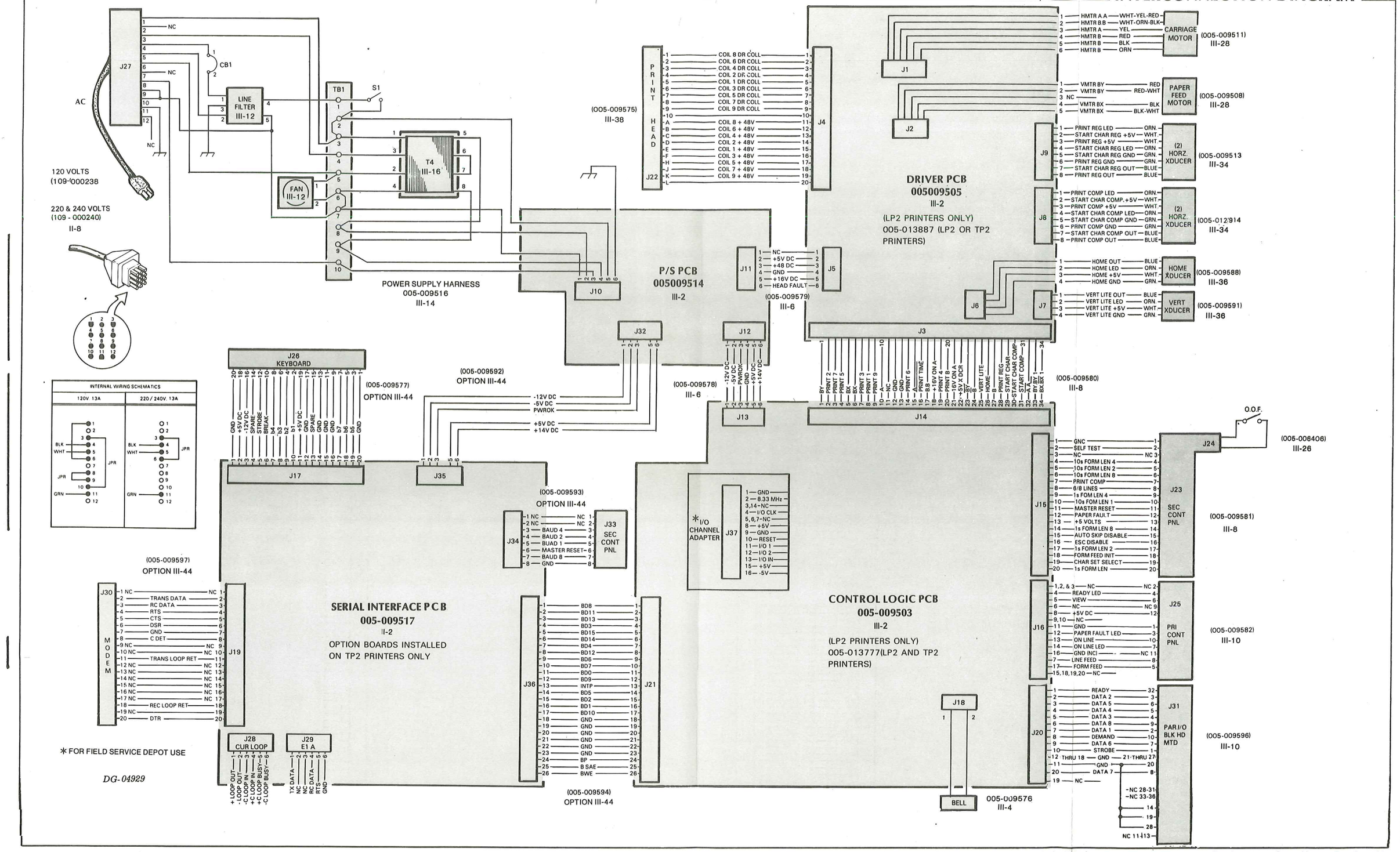

* FOR FIELD SERVICE DEPOT USE

DG-04929

Rev. 01

The drawings and parts lists contained herein are the property of DGC and shall neither be reproduced in whole or in part without DGC prior written approval nor be implied to grant any license to make, use, or sell equipment manufactured in accordance herewith.